DIAL-IN Accuracy Tools to Super-Tune Your Table Saw

Woodsmith®

www.woodsmith.com

Vol. 29 / No. 172

HIGH-BACK HALL BENCH

- EASY, NO-FUSS TABLE SAW JOINERY
- FLIP-LID STORAGE
- SIMPLE DESIGN OPTION

FINISHING ESSENTIALS

TOP 12 SHOP SUPPLIES

PLUS

Discover 2 NEW Project Designs You Can Build in a Weekend

A Publication of August Home Publishing

Table of Contents

from our readers
Tips & Techniques 4

all about
Choosing and Using Oak 8
Here's what you need to know to pick the right type of oak for your next project.

tools of the trade
Selecting a Router for your Table . . .10
Take a look at all the great features available on the current crop of routers.

jigs and fixtures
Table Saw Alignment Jigs 14
If you demand dead-on accuracy from your table saw, check out these alignment jigs.

tips from our shop
Shop Notebook 32

techniques from our shop
Stub Tenon and Groove Joinery . . .40
Here's a quick, easy way to make strong frame and panel assemblies at the table saw.

working with tools
Mastering the Sliding Miter Saw . .42
Learn how to put a sliding compound miter saw to work in your shop.

finishing room
12 Must-Have Finishing Supplies . .46
Keeping your finishing cabinet well stocked will give you a big boost toward a quality finish.

details of craftsmanship
Built-up Crown Molding 48
Make traditional-looking crown molding with a few basic router bits and a simple technique.

in the mailbox
Q & A 50

hardware and supplies
Sources 51

Letter Bin page 16

2-in-1 Desk Set page 34

projects

designer series project

Letter Bin 16

Tired of the clutter? Get your mail organized with this compact wall unit. It features graduated, lattice-panel compartments that give it a great look and provide a nice challenge for your woodworking skills.

heirloom project DESIGNER'S NOTEBOOK Woodsmith GO ONLINE EXTRAS

High-Back Hall Bench 22

The impressive look of this Craftsman-style hall bench will surely make it a standout in your entryway. Add storage, classic details, and shop-tested techniques to the mix and this project is a hard one to pass up.

weekend project

2-in-1 Desk Set 34

Here's a small, "time-friendly" project with a unique look and function. It's a desktop stamp dispenser and letter opener all in one.

High-Back Hall Bench page 22

editor's note

Sawdust

Sometimes it's the small problems that can be the most frustrating. In this issue, what started out as a seemingly simple project idea ended up as a real design challenge. It all began when we decided to design and make a letter opener. We didn't want one with the typical long, dagger-like blade. Instead, we were aiming for a more compact design, similar to the small, plastic letter openers that are often given away as promotional items. These openers have a short, pointed tip that slips under the flap of the envelope. Then as you slide the opener along, a safely recessed cutting edge slices the envelope open. All we had to do was come up with a way to make one. Sounds easy enough, right?

We started with a "working" prototype—unfortunately it didn't work so well. The paper just jammed up on the blade. Obviously, we needed to make some changes and try again. Nothing major, just some small things, like lowering the angle of the cutting edge and changing the shape of the blade. But I have to tell you, after about two or three revisions, it was getting pretty frustrating. In fact, I considered just scrapping the project altogether.

In the end, we tweaked or modified the prototype six times before we arrived at the final design. And I'm glad we kept at it. The final version works great and includes a handy base to hold the letter opener as well as a roll of postage stamps.

On a final note, I would like to welcome Carol Beronich, who has joined us as an Assistant Editor. Carol has more than fifteen years of editorial experience and is a self-taught woodworker. She started building storage cabinets for her house and quickly moved on to building furniture for herself and her grandchildren.

Terry

ONLINE EXTRA video workshop Woodsmith GO ONLINE EXTRAS

These two symbols let you know there's more information online at www.Woodsmith.com. There you'll see step-by-step videos, technique and project animation, bonus cutting diagrams, and a lot more.

Tips & Techniques

Bar Clamp Overhead Storage Rack

Storing clamps has been rather haphazard in my small basement shop. I'd either hang them on the wall, lay them on a shelf, or stick them anywhere I could find space. Then I came up with a way to take advantage of the unused space overhead and built the clamp storage rack you see here.

The rack stores all my bar clamps in one place. Short lengths of PVC pipe held in the rack serve as compartments to store each clamp individually. By lining the pipes up side by side, I have easy access to the exact size of clamp I need.

The drawing below shows how the storage rack goes together. I started with 2x4 stock and used a hole saw to cut the holes for the pipe. Then, I ripped the rails in half. That way, the rails will grip the pipe tightly when they're screwed back together.

The assembly is attached to a pair of plywood ends. The ends are used to mount the rack to the ceiling joists.

After hanging the rack, all that's left to do is slide your bar clamps into the pipe.

Ted Kralicek
Des Moines, Iowa

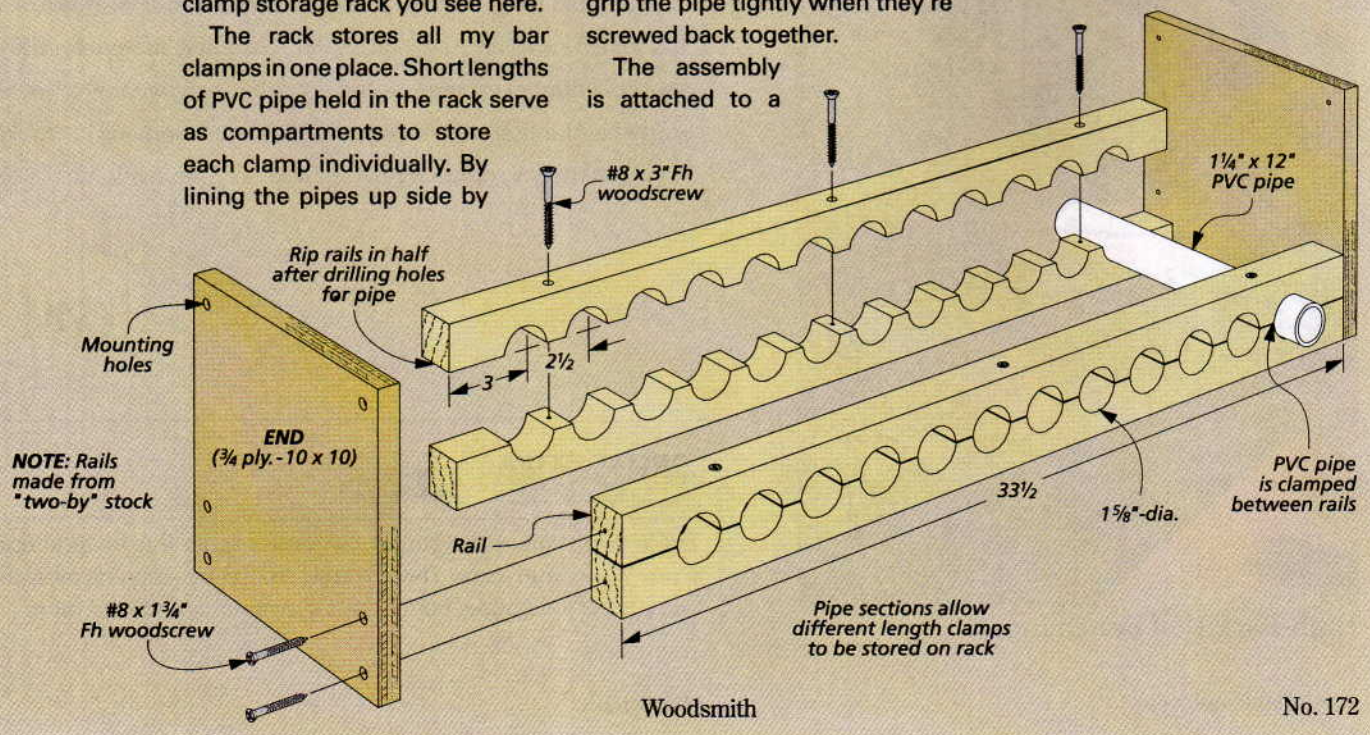

Band Saw Balance

While replacing the tires on my band saw, I realized one of the wheels was out of balance. Instead of drilling holes around the wheel to balance it, I decided to try something different.

I gave the wheel a gentle spin and let it come to rest to determine the "heavy" spot. Then, I wound about 6" of copper wire around the opposite spoke. Finally, I spun the wheel and snipped off pieces of wire until the wheel was balanced.

Joseph Scharle
Holly Springs, North Carolina

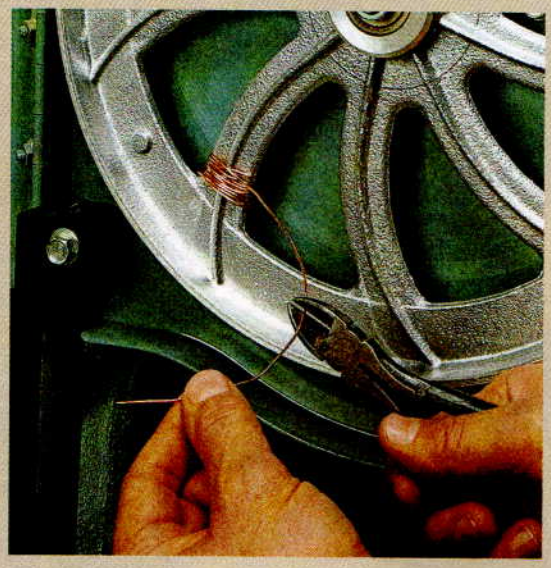

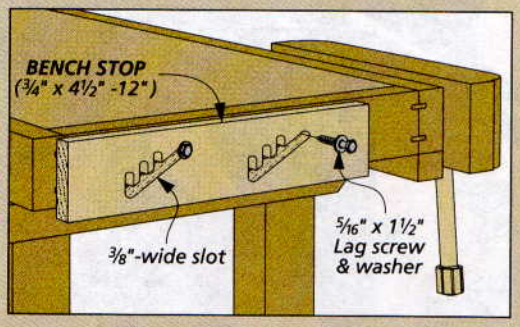

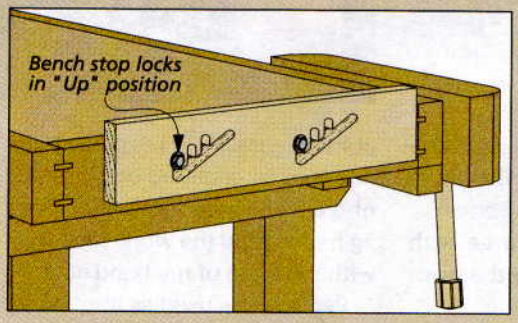

Quick Bench Stop

To make sanding and planing tasks easier, I added a stop to the end of my workbench. Most end stops have vertical slots and are held in place by plastic knobs. I wanted my stop to be more of a "one-handed" operation, so I modified the slots, as you can see in the two drawings on the left.

Instead of vertical slots, I cut them at an angle and added "steps." The stepped slots allow me to quickly raise or lower the bench stop with just one hand.

The lag screws are tightened just enough so the stop can be moved without too much play.

Ross Henton
Frisco, Texas

SUBMIT YOUR TIPS

If you have an original shop tip, we would like to hear from you and consider publishing your tip in one or more of our publications. Just go to our web site at *www.Woodsmith.com* and click on the link, "SUBMIT A TIP." Or you can mail your tip to:

Woodsmith Tips and Techniques
2200 Grand Avenue
Des Moines, IA 50312

Please include your name, address, and daytime phone number in case we have any questions. We will pay up to $200 if we publish your tip.

FREE TIPS BY EMAIL

Now you can have the best, time-saving secrets, solutions, and techniques sent directly to your computer. Just go to **www.woodsmith.com** and click on ***"Sign Up for Free E-Tips."*** You'll receive one of our favorite tips by email each week.

Woodsmith

No. 172 August/September 2007

PUBLISHER Donald B. Peschke

EDITOR Terry J. Strohman

MANAGING EDITOR Vincent Ancona
ASSOCIATE EDITOR Ted Raife
ASSISTANT EDITORS Mitch Holmes, Dennis Perkins, Carol Beronich
CONTRIBUTING EDITORS Bryan Nelson, Phil Huber, Randall A. Maxey
EDITORIAL INTERNS Abby Harvey, Catherine Seiser

EXECUTIVE ART DIRECTOR Todd Lambirth
SENIOR ILLUSTRATORS David Kreyling, Dirk Ver Steeg, Harlan V. Clark
SENIOR GRAPHIC DESIGNER Bob Zimmerman
ILLUSTRATORS David Kallemyn, Peter J. Larson
GRAPHIC DESIGNER Shelley Cronin
GRAPHIC DESIGN INTERN Emily Seibert

CREATIVE DIRECTOR Ted Kralicek
SENIOR PROJECT DESIGNERS Ken Munkel, Kent Welsh, Chris Fitch, Jim Downing
PROJECT DESIGNERS/BUILDERS Mike Donovan, John Doyle
SHOP CRAFTSMEN Steve Curtis, Steve Johnson
SR. PHOTOGRAPHERS Crayola England, Dennis Kennedy
ASSOCIATE STYLE DIRECTOR Rebecca Cunningham
ELECTRONIC IMAGE SPECIALIST Allan Ruhnke
VIDEOGRAPHERS Craig Ruegsegger, Mark Hayes

Woodsmith® (ISSN 0164-4114) is published bimonthly (Feb., Apr., June, Aug., Oct., Dec.) by August Home Publishing Company, 2200 Grand Ave, Des Moines, IA 50312.

Woodsmith® is a registered trademark of August Home Publishing.
Copyright© 2007 August Home Publishing Company. All rights reserved.

Subscriptions: Single copy: $4.95. One year subscription (6 issues), $24.95. (Canada/International add $10 per year, U.S. funds.)
Canadian Subscriptions: Canada Post Agreement No. 40038201. Send change of address information to PO Box 881, Station Main, Markham, ON L3P 8M6. Canada BN 84597 5473 RT
Periodicals Postage Paid at Des Moines, IA, and at additional offices.
Postmaster: Send change of address to *Woodsmith*, Box 37112, Boone, IA 50037-2112.

www.Woodsmith.com

ONLINE SUBSCRIBER SERVICES

- **VIEW** your account information
- **RENEW** your subscription
- **CHECK** on a subscription payment
- **PAY** your bill
- **CHANGE** your mailing or e-mail address
- **VIEW/RENEW** your gift subscriptions
- **TELL US** if you've missed an issue

Click on the link, "MANAGE MY ACCOUNT" in the list on the left side of our home page. Menus and forms will take you through any of the account maintenance services you need.

CUSTOMER SERVICE **Phone: 800-333-5075**

SUBSCRIPTIONS
Customer Service
P.O. Box 842
Des Moines, IA 50304-9961
subscriptions@augusthome.com

EDITORIAL
Woodsmith Magazine
2200 Grand Avenue
Des Moines, IA 50312
woodsmith@woodsmith.com

AUGUST HOME PUBLISHING COMPANY

Printed in U.S.A.

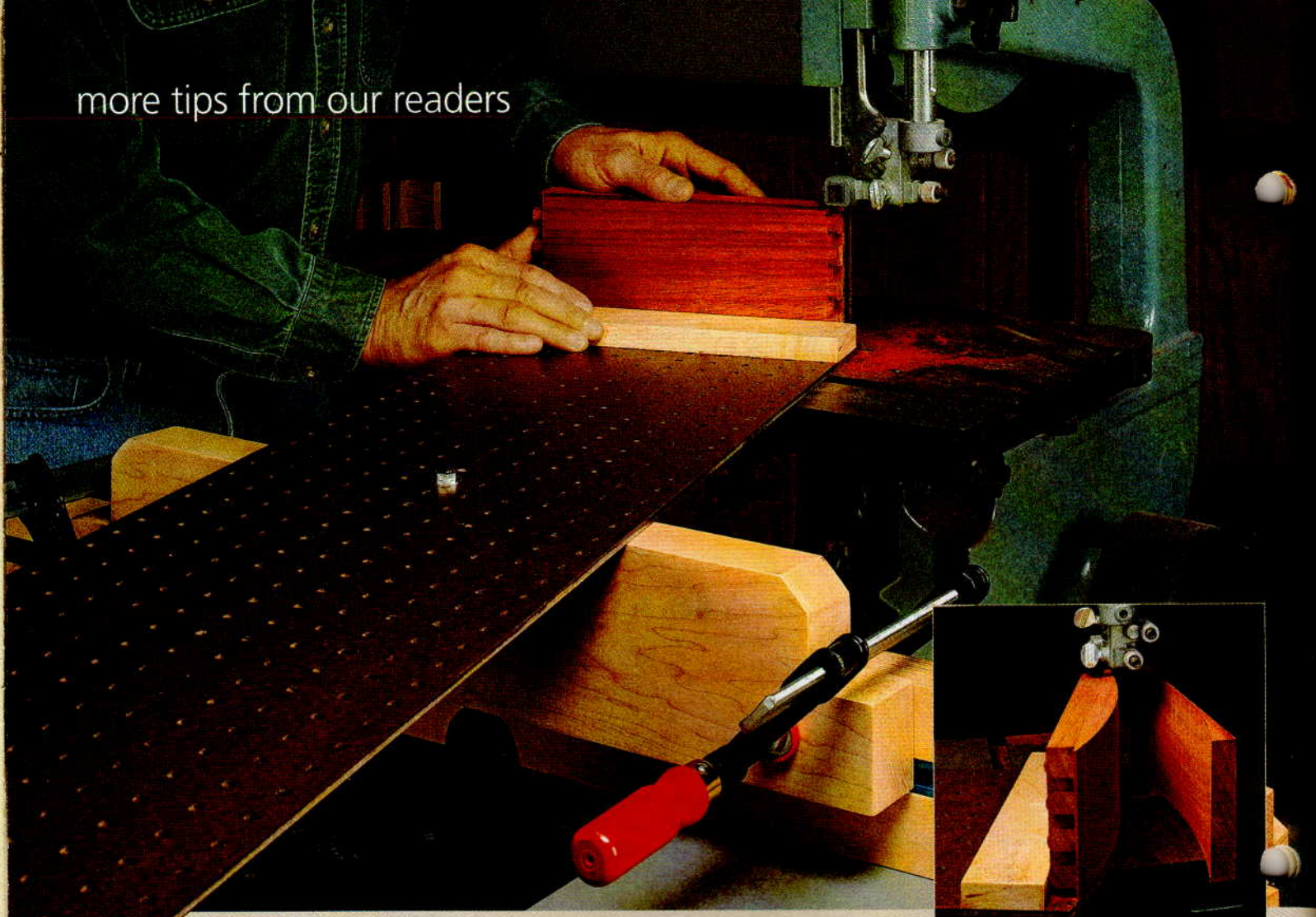

Radius Jig for Band Saw

Recently, I began making some bedroom furniture that featured numerous drawers with curved fronts. To help me cut a consistent arc on the fronts, I devised the radius-cutting jig for my band saw that you see here.

The jig allows you to pivot the workpiece easily across the blade for a perfect cut (photos above).

Getting the perfect curve with this jig lies with locating the pivot point accurately. The pivot point needs to be centered on the blade of the band saw. And, finally, the jig had to hold the workpiece level with the table of my band saw.

Pegboard is used as the "swing arm" because it has a lot of evenly spaced holes for pivot points. It's attached to a base with a hex bolt and a threaded insert. The base supports the swing arm level with my band saw table. And for stability, the workpiece is carpet-taped to the fence at the end of the swing arm.

My router table came closest to meeting those requirements, so I clamped the jig base to my router table fence. That allowed me to fine-tune the placement of the pivot point to get the right alignment and height for the fronts.

Dudley Donnelly
Fort Collins, Colorado

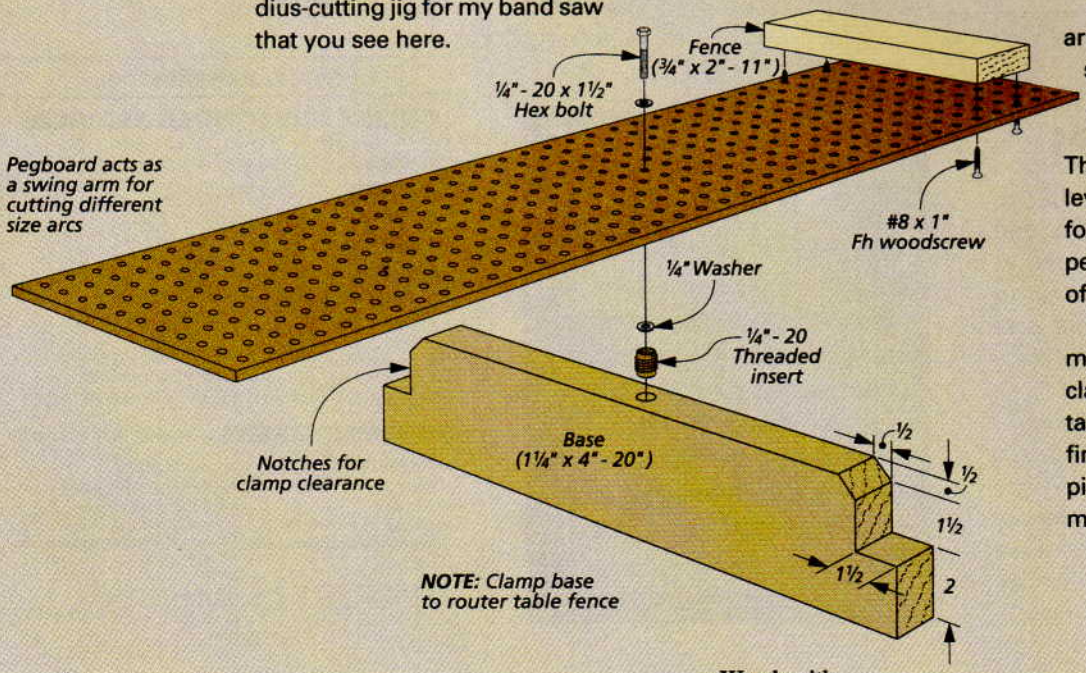

Roller Featherboard

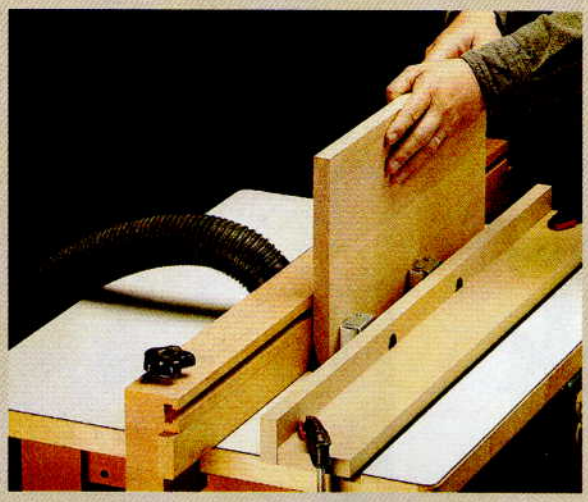

When using a vertical raised panel bit in the router table, the workpiece is held on edge. When you try to steady the workpiece with a regular featherboard, it only puts pressure along the bottom.

So, I came up with a roller "featherboard" that applies pressure to more of the panel. In the drawing below, you can see that it's simply an L-shaped fence with a pair of appliance casters. Springs are fastened behind them to push the casters against the workpiece. The casters let the panel glide easily past the bit while keeping it pressed firmly to the router table fence.

The base and fence of the featherboard are made from ¾" MDF. I drilled oversized holes for the caster studs, so the springs could move the casters in and out easily. And since the studs on the casters are rather short, I also counterbored the holes, as shown in detail 'a.'

There's one more thing to mention. It's easier to put the springs and casters in place before the base and fence are glued and screwed together.

Rob Reyher
Michigan City, Indiana

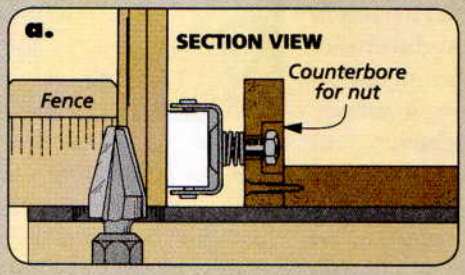

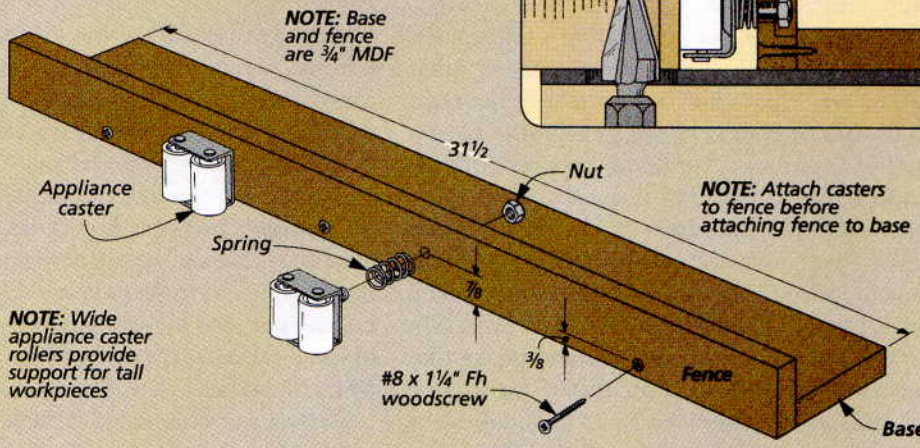

Quick Tips

BETTER BAND SAWING

Even when a band saw is properly tuned, the blade can still wander a bit when cutting. My solution is to run a small sheet of MDF (the same size as the table of my band saw) halfway through the blade. I then clamp the sheet to the table to serve as a zero-clearance auxiliary table. Leaving the blade in the kerf further stabilizes it during use.

John Karek
Toronto, Ontario, Canada

RESPIRATOR IMPROVEMENT

To extend the life of the expensive cartridges on my respirator, I trim and attach inexpensive dust masks to the outside of the cartridges with rubber bands.

These function as "prefilters," capturing larger particles of dust and leaving the respirator's cartridge filters to handle the finer dust. I wear a respirator whenever I'm in the shop and haven't noticed any reduction of air flow.

Richard Hyers
Catonsville, Maryland

PLASTIC TUBING DRILL STOP

Here's a quick drill stop I use all the time: Simply cut a length of plastic tube, slip it over the drill bit, and tape it to the chuck. The length of the tube dictates how deep you drill your holes.

Bob Zimmerman
Des Moines, Iowa

WIN THIS PORTER-CABLE VARIABLE SPEED ROUTER

That's right, send us your favorite shop tips. If your tip or technique is selected as the featured reader's tip, you'll win a *Porter-Cable* variable speed router just like the one shown here. To submit your tip or technique, just go online to *www.woodsmith.com* and click on the link, "SUBMIT A TIP." You can submit your tip and upload your photos for consideration.

The Winner!

Congratulations to Dudley Donnelly of Fort Collins, Colorado. His jig for cutting curves on a band saw was selected as the winner of the *Porter-Cable* router. The jig allows him to cut different sizes of arcs with great precision.

To find out how you could win a *Porter-Cable* variable speed router, check out the information on the left.

choosing and using **Oak**

Here's the scoop on getting your oak project started off right.

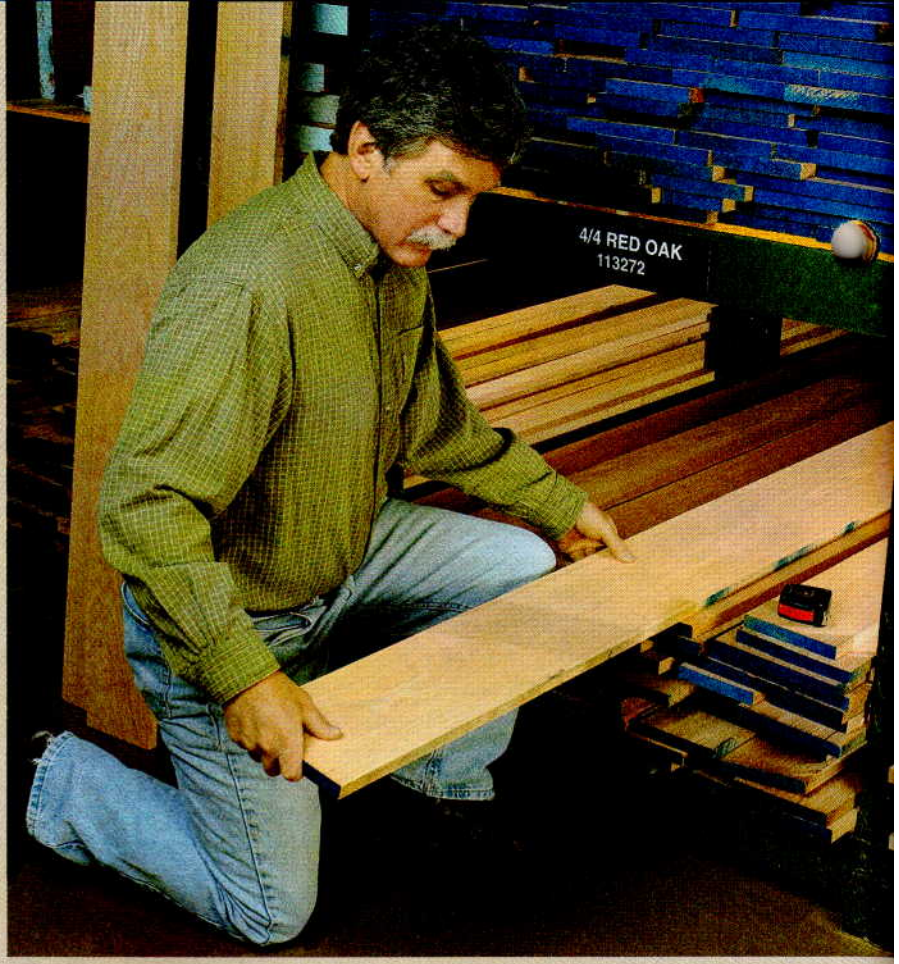

When it comes to building furniture and cabinets, one type of wood stands above all the rest in popularity — oak. And there are good reasons. Oak has an unmistakable look. Its strong grain pattern always draws attention. And maybe most importantly for a woodworker, it's a friendly wood to work with and you can be certain the project will last a lifetime. Top this with the fact that oak is readily available and moderately priced, and you can see why it's so high on the list.

ISN'T OAK JUST OAK? But when you decide on oak for your project and make a trip to the lumber store to buy the stock, you discover the decision isn't always so simple. Right off the bat, you're usually confronted with a choice between white oak and red oak. And oak is one of the few woods that's often available in different figures or grain patterns. So to make the right choice, it's very helpful to have a good "working" knowledge of the different types of oak.

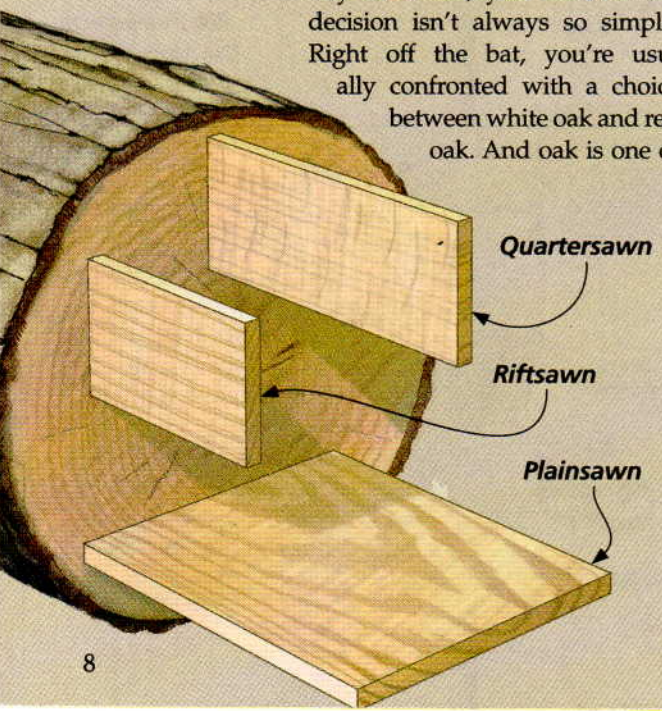

TWO MAIN TYPES. The many species of oaks are generally divided into two groups — the red oaks and the white oaks. And out of these two groups come the two species that are widely marketed for lumber — Northern Red Oak and Eastern White Oak. You'll find other species of oak being used for lumber but not on a level with these two big guns of the oak world.

RED VS. WHITE. Since the appearance of the wood in a project is always a major (if not the number one) factor, the differences here are a good place to start. Then I'll get into a few other distinctions that can affect your choice.

When it comes down to it, even experienced woodworkers sometimes have a hard time telling red oak from white oak without a real close look. Both are "open-grained" woods with fairly large pores. And the pores are concentrated in distinct growth rings. The "ring porous" nature of oak is a major contributor to its appearance.

But take a look at the photos at the bottom of the opposite page and you'll see some of the subtle differences. The pores of red oak are a little larger and more densely bunched, so the grain pattern is a bit stronger. And the smaller pores of white oak make the surface seem a little smoother.

Red oak and white oak also differ a bit in color. But every "authority" has a different description. To me, red oak has a more consistent "tan" color from one board to another, and across a single board. White oak is usually slightly darker and is often much more variable from board to board. This difference can be an important point when choosing which oak to use for a project.

FIGURE. Whether you're talking about red or white oak, one of the things that affects the appearance of a board is the way it's cut from the log. Oak can often be purchased in three different cuts or figures — plain or flatsawn, quartersawn, and riftsawn. The figure

difference relates to how the surface of the board is oriented to the growth rings of the tree. The drawing on the opposite page and the photos at right illustate this.

PLAINSAWN. As the name implies, plainsawn boards are cut from the log with no special consideration to grain pattern. The annual rings usually form concentric arcs on the end of the board and the surface grain has a typical "cathedral" pattern. This is the easiest and most efficient way to cut boards from a log. And this is the type of red oak and white oak you'll most commonly find at the lumberyard.

QUARTERSAWN. There's another way to cut oak that gives the boards a very unique figure. A quartersawn board is cut so that the annual rings are as close to perpendicular to the face as possible. When oak is quartersawn, the large, flat "rays" are exposed on the surface. These simply appear as dark, linear streaks on the surface of the plain sawn boards in the photos below. The result of this is the characteristic "flake" figure often found on Craftsman-style furniture.

The rays of white oak are longer, so white oak usually has a more pronounced quartersawn figure than red oak. For this reason, quartersawn white oak is more sought after and commonly available than quartersawn red oak. But when a slightly more subtle quartersawn figure would look better, red oak can be a good choice.

RIFTSAWN. Riftsawn oak falls in between quartersawn and plain sawn oak. This milling technique takes advantage of the ring porous nature of oak to create lumber with a linear figure. Here the boards are cut so that the annual rings are 30° to 60° to the face. This avoids the flake look of quartersawn oak while emphasizing the almost striped look created by the pores.

On a project, riftsawn oak gives you a very uniform look and makes matching boards much easier. If a strong riftsawn look is what you're after, the larger pores of red oak give it the nod. The hall bench on page 22 is a good example of this.

LOOKS AREN'T EVERYTHING. Besides appearance, there are a few other characteristics that can affect your choice. Both oaks own a well-deserved reputation for being hard and heavy when compared to other commonly used woods. White oak can claim top prize in this category. It's about 10% heavier than red oak and consequently a bit denser and harder. Just another point to keep in mind.

As any woodworker can tell you, different woods have their own working characteristics. The two oaks are no exception. I don't think you'll notice too much difference between red and white oak when working with power tools. Both can be cut on the table saw, jointed, planed and routed easily.

But when it comes to hand work, you'll notice a bit of a difference. The hardness and density of white oak can make operations like hand planing or paring with a chisel a challenge. So if your project involves hand work, red oak may be the wiser choice.

AN OUTDOOR PROJECT. Finally, I should mention one other distinction. If you're building an outdoor project that will be exposed to the weather, your best choice is usually white oak. White oak is essentially waterproof (it's the oak used to make barrels) and is fairly decay resistant. Red oak doesn't have these properties and won't hold up to the elements nearly as well.

PLYWOOD TO MATCH? What about mixing solid wood and plywood in a project? Due to availability, this can sometimes be a sticking point. Plainsawn or rotary cut red oak plywood is easy to find while white oak plywood is becoming more common. And both types are sometimes available with a quartersawn or riftsawn figure, but you might have to do some serious searching or put in a special order with your lumber supplier.

I guess the really good news here is that building with oak gives you lots of options and it's hard to go wrong. Whichever oak you choose, your project will look great. W

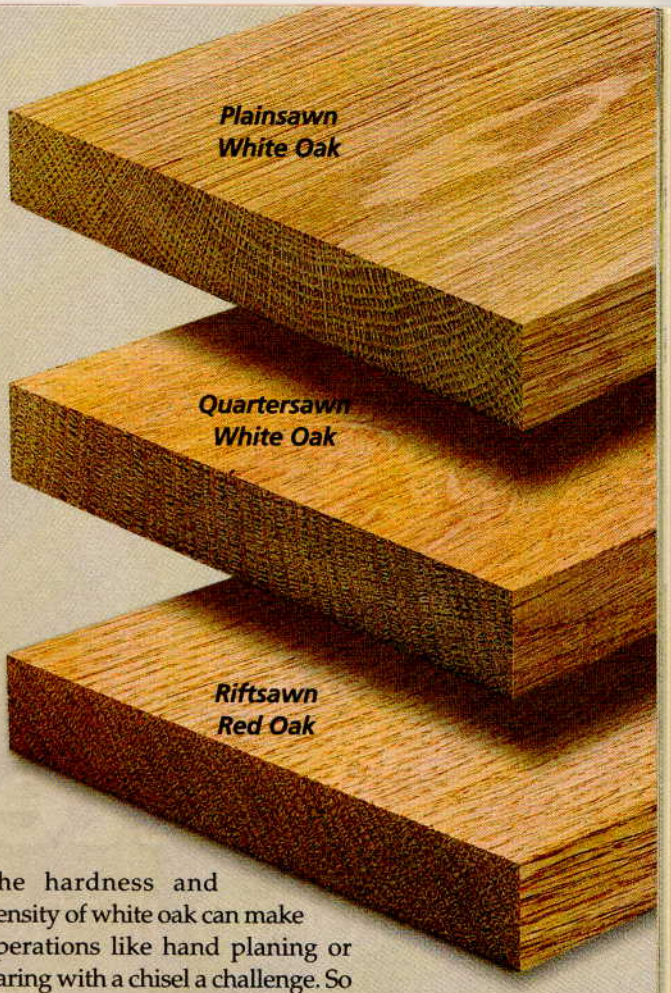

▲ As you can see in the photos above, the three different "cuts" of oak can be very different in appearance.

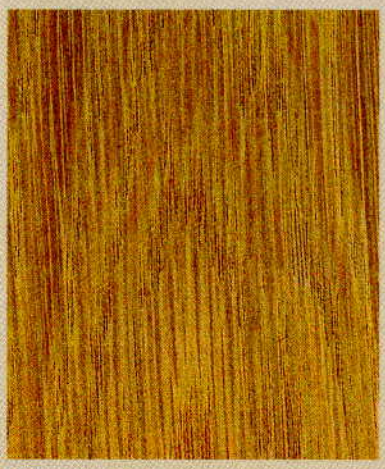

▲ **White Oak.** You'll often find a slightly darker color and denser texture in a white oak board.

▲ **Red Oak.** The larger pores and lighter color give red oak a slightly stronger grain pattern.

choosing the right **Router** for your table

A router is often most useful when it's upside down. And the current crop of routers includes many features tailored for table use.

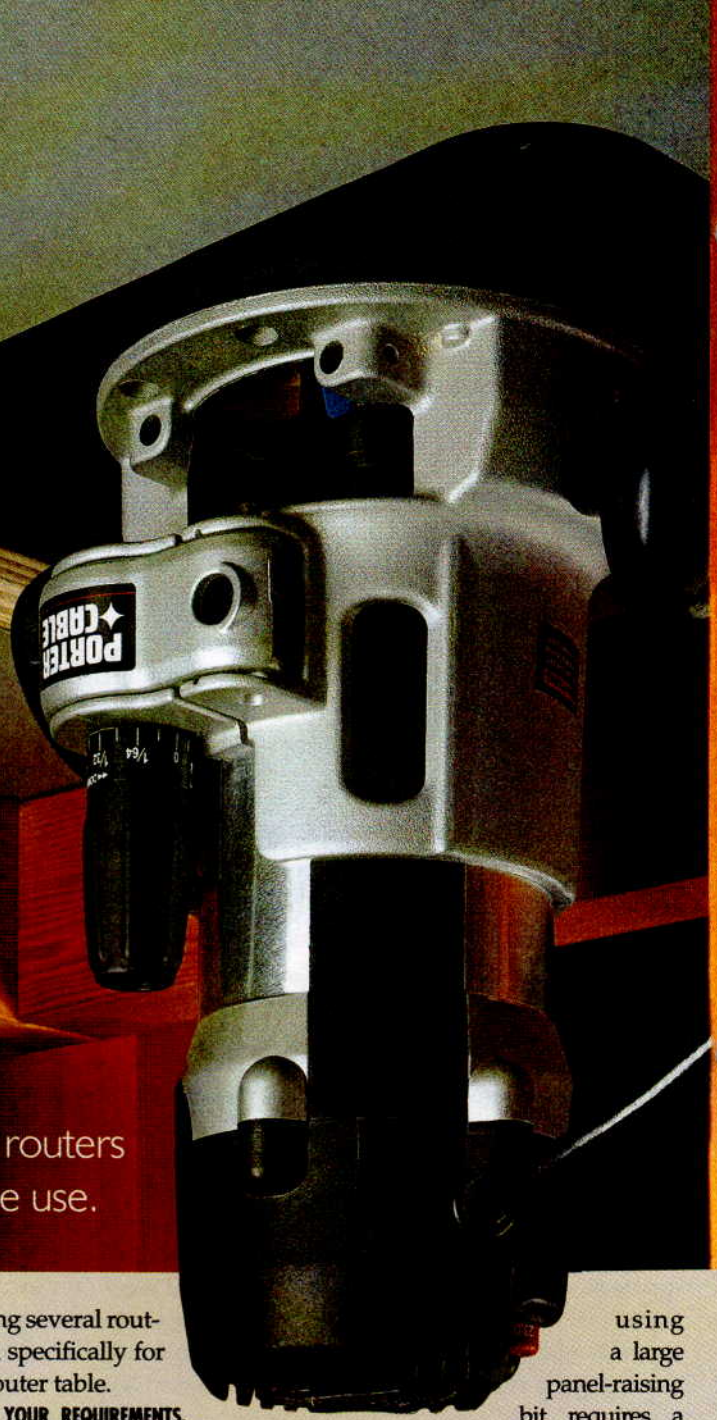

A router table is one of the most versatile tools in your shop. With a good fence, a dust collection port, and a miter gauge track, you can do just about anything. But no matter how well-equipped the table is, you'll still need a good router. Fortunately, manufacturers have addressed this need by introducing several routers aimed specifically for use in a router table.

DEFINING YOUR REQUIREMENTS. Choosing the right router starts by focusing on how you'll use your router table and what kind of work you plan to do with it. In other words, by defining your requirements, you can zero in on the router that best complements your way of working.

DO YOU NEED A MONSTER? For instance, one of the first considerations is how big a router you need. Often that question is best answered by whether or not you plan on building a lot of cabinets with raised-panel doors. The reason this is an important question is because using a large panel-raising bit requires a router with lots of power.

That means one of the heavy-duty 3-hp giants. Most of the major manufacturers now make a 3-hp plunge or fixed-base router (they actually range from 3 to 3½ hp). They're great performers and will hog off material in a hurry without bogging down. But the fact of the matter is there aren't many other typical operations that require that kind of horsepower.

THE DOWNSIDE OF POWER. Normally, I'm a big fan of power. And erring on the side of too much rather than too little is a pretty good policy when it comes to selecting tools

▼ The 3½-hp plunge router (below) will handle any task, but the 2¼-hp version may be all you need.

for your shop. But the big routers can present a few problems when mounting them in a table.

First, there's the issue of weight. They range between 13-17 lbs. And that means they can cause your table or mounting plate to sag. So you may also need to make your tabletop thicker (at least 1"), or use a good bracing plan if you're mounting it to a removable phenolic plate.

Second, as you can see in the photo at the bottom of the opposite page, there's also a significant difference in size. Some have handles that extend past the sides of the plate. That leads to a lot of twisting and turning to remove them from the table.

Finally, the price alone may be enough to make you consider choosing a mid-size model. You can expect to pay between $225-$350 for a good 3-hp router.

FIXED-BASE OR PLUNGE? It used to be that the only 3-hp routers available were plunge routers. For that reason, you saw a lot of them mounted in tables. That popularity spurred manufacturers to add features most sought after for table applications, like easier height adjustment. Often this was just a length of threaded rod with a knob attached to the router's height adjuster (more on this later).

But plunge routers have some serious disadvantages. Changing bits can really be a hassle with a table-mounted plunge router. You usually need to remove the whole router to get a wrench on the collet lock nuts.

Most fixed-base routers can be mounted directly to the table or baseplate and still be easily removed for bit changes. Usually, it's just a quick-release catch and the motor is free.

For all the reasons cited already, plunge routers just aren't the best choice in my book. There are too many fixed-base routers available that offer all the advantages without the headaches of a plunge router.

DEDICATED OR MULTI-PURPOSE. Another consideration is whether you can dedicate the router to the table or if you'll also need it to do hand-held work. If this is your first (and only) router, you may want to consider a multi-base router kit like the one shown in the photo at left.

These kits offer the best of both worlds at an affordable price. That is, you can mount the fixed base to your table and still have the plunge base readily available for hand routing. With this arrangement, all you need to do is slip the motor out of one base and into the other and you're up and running.

MORE GREAT FEATURES. Manufacturers have started to include more sought-after features in their new designs. Above-the-table height adjustment and quick and easy one-wrench bit-changing capability are just the start. For more on these features, turn the page.

▲ With a multi-base router, you can mount the fixed base to the insert plate. And for hand routing, just pop it out of the table and into the plunge base.

Option: Auxiliary Switches

One feature you can add to your router table to make it a little more user-friendly is an auxiliary power switch. This eliminates fumbling around underneath the table to find the switch on your router. You just plug your router into the switch and you're ready to start routing. If you ever need to shut the router off in a hurry (especially in an emergency), you'll appreciate the safety factor of having a more accessible switch.

You can either buy a ready-made auxiliary switch, or build your own with a few common electrical parts. **Editor's Note:** If you're not comfortable with basic electrical wiring, seek the help of a qualified electrician.

Refer to Sources on page 51 to find out where to get the commercially available switch. The parts for the switch in the far right photograph are available at any hardware store or home center.

▲ **Commercial Unit.** The convenience and safety of a good auxiliary switch is well worth the $25 price tag.

▲ **Build Your Own.** An outlet box and switch is all it takes to wire your own shop-made version.

IT'S ALL ABOUT THE FEATURES

By now you've seen the advantages and disadvantages of 3-hp routers and plunge or fixed-base models. But there are several other features that can make working at your router table easier and more convenient. Don't underestimate the value of convenience — it often determines whether you'll use your router table, or skip it in favor of an easier "work around."

WHICH FEATURES MAKE A DIFFERENCE? One of these key features is dust collection. If your router produces clouds of dust every time you fire it up, chances are you'll find reasons to avoid it. So a router with dust collection can make a difference.

There are also simple design choices, like having the speed control and the on/off switch on the same side of the motor. Having them on opposite sides means more fumbling around under the table. See the photos on the opposite page to get an idea of what I mean.

Another handy feature is the ability to raise and lower the bit and even change bits from above the table. This is one area where most router designs have come a long way in the last few years.

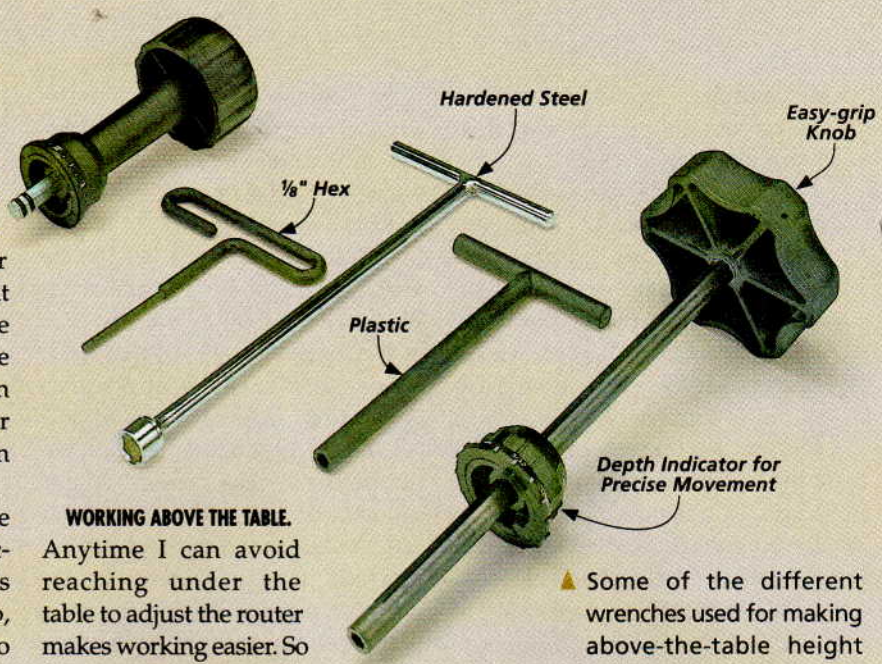

▲ Some of the different wrenches used for making above-the-table height adjustments.

WORKING ABOVE THE TABLE. Anytime I can avoid reaching under the table to adjust the router makes working easier. So for me, above-the-table height adjustment is a must. The good news is most new routers have some way of making height adjustments from above.

If you take a look at the wrenches in the photo above, you'll see that each company has adopted different methods. Some have hex rods fitting into set screws, while others use a socket-style wrench. Some even include a depth indicator to show precisely how far each turn raises or lowers the bit. But the big difference here is durability. Some are either too weak or badly designed and will snap easily under pressure.

BACKLASH. All the height-adjustment systems work pretty well, but most have some backlash (the "play" you feel when turning a screw before it actually raises or lowers). I'm not bothered by backlash too much since I prefer to make height measurements above the table with a rule next to the bit. But backlash does negate the value of the depth indicators, and if it's excessive, it can be annoying.

INNOVATIVE DESIGN. Even if you can adjust the height from above the table, on most routers you still have

▲ **Base Lock.** A wrench is inserted through the baseplate (or table insert) to unlock the base.

▲ **Height Adjustment.** A second hole in the plate is for raising or lowering the bit.

▲ **How It Works.** The wrench goes through the base and connects to the height adjuster.

to reach underneath to release a locking mechanism. This frees the router motor to change height.

Porter-Cable's 890 series routers use a quick-release collar to secure the motor in the base. But they've added a convenient way to unlock it from above the table, too. In addition to the hole in the base for height adjustment, there's also a hole to release the lock using the same wrench. (See the photos at the bottom of the opposite page.) This simple idea makes it a great candidate for table mounting.

CHANGING BITS. But for me, the handiest feature in a table-mounted router is the ability to change bits without removing the router from the table. Once again, several companies have included this feature on their new fixed-base routers.

To change bits, you just need to raise the router up to maximum height to gain access to the collet lock. On some models, you'll need to get two wrenches on the nuts, and this can be a problem depending on the size of the opening in your table. That's why router manufacturers have replaced this design with spindle locks that make bit changing a little easier.

▲ The *Porter Cable 894* offers a dust collection port in the handle and a base plate that keeps dust out of the motor.

▲ When used in a table, routers with the speed control and the power switch located on the same side (left photo) are far more convenient than those located on opposite sides of the motor (right photos).

▲ Freud's spindle lock (right) is automatically engaged when the motor is fully raised, allowing single-wrench bit changes.

A spindle lock is just a small button that engages a flat spot on the spindle when pushed. This prevents it from turning when you turn the wrench on the collet lock nut.

On its *FT1700VCEK* model, *Freud* added the handiest method I've seen yet. As you can see in the bottom left photo, as the router is raised the spindle lock contacts a tapered post that depresses the button automatically. Then you can change the bit with a single wrench.

DUST COLLECTION

As I said earlier, if your router fills the shop with dust every time you turn it on, you'll be less likely to use it. Some routers handle this problem by including ways to harness dust at the source. Usually, these methods mean attaching a clear plastic dust port to the base and connecting it to a vacuum hose.

These dust ports vary in effectiveness, but most work fairly well. Unfortunately, this approach doesn't address the problem of dust falling into the motor while the router is mounted upside down.

Some companies have designed dust collection plates that cover the motor. The round plates include a channel that feeds into the dust collector port. One example is shown in the photo above.

PLENTY TO CHOOSE FROM. Of course, woodworkers have been making routers of all kinds work well in their tables for years. So there are no wrong answers. But it's nice to know that there are routers with features to suit your needs. W

table saw

Alignment Jigs

Tired of saw cuts that are rough, ragged, or out of square? Then try one of these alignment jigs for dialing in extreme accuracy on your table saw.

I don't think there's any tool in my shop that gets more use than the table saw. But even the best table saw isn't much good if it isn't properly aligned. A saw with misaligned trunnions, arbor runout, or a rip fence that isn't parallel with the blade will usually leave behind some tell-tale signs: swirl marks, burns on the freshly cut edge, or cuts that are out of square. And a table saw that is out of alignment isn't just an annoyance — it can be a potential safety hazard by causing dangerous kickback.

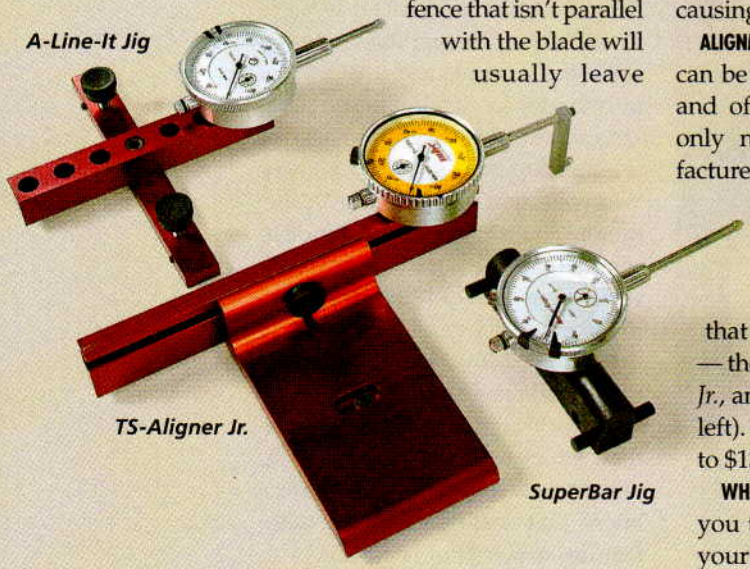

ALIGNMENT JIGS. Aligning a table saw can be a tedious, time-consuming, and often frustrating task. So it's only natural that several manufacturers have come up with jigs to take some of the hassle out of adjusting and aligning your table saw.

I took a look at three jigs that are currently on the market — the *A-Line-It Jig*, the *TS-Aligner Jr.*, and the *SuperBar Jig* (photo at left). They range in price from $60 to $135 (see page 51 for sources).

WHAT THEY DO. These jigs allow you to check several settings on your table saw. Any one of them can be used as a diagnostic tool to measure runout on your saw blade, arbor, and arbor flange, to check that the blade is parallel with the miter gauge slots, and to make sure the fence is parallel to the blade.

HOW THEY WORK. Although they each have some different features, all three jigs work in the same way. They all fit in the miter gauge slot of the saw and use a dial indicator to precisely measure slight variations in distance between two points.

RUNOUT. For example, to check for blade runout, place the tip of the dial indicator against the plate of the blade and zero out the indicator. Then slowly rotate the blade by hand. Any movement of the inidicator needle will tell you the amount of runout your blade has, in thousandths of an inch. (The box on the opposite page will tell you how to check for arbor flange runout.)

ALIGNMENT. Another important test is checking the alignment of the blade with the miter gauge slots. To check this adjustment, simply set the tip of the indicator against the side of the blade, near the front edge. After zeroing out the indicator, slide the jig to the rear of the saw and rotate the saw blade by hand so that the tip of the indicator is touching the same spot on the blade as when you took your first reading. The dial indicator will show you how far out of parallel the blade is with the miter gauge slot.

FEATURES. Although each of these jigs does more or less the same thing, there are a few features that distinguish one from another. For example, the makers of the *SuperBar* jig also offer the *MasterPlate*, a flat, machined reference plate that you install on your saw in place of the blade (photo below). The perfectly flat plate ensures more precise readings than you would get from using your blade as a reference surface.

Most of the other differences between the jigs have more do with their design rather than how well they function. But one feature I really liked is the way the *TS-Aligner Jr.* adjusts to fit the miter gauge slot. Three small ball bearings on the underside of the jig can be adjusted to take up any play between the jig and the slot, giving you precise readings every time (photo above).

THE BOTTOM LINE. So do you actually need one of these jigs? The short answer is no. For years, I've kept my table saw aligned using little more than a combination square. And even with one of these jigs, you'll still have the task of making the necessary adjustments to bring your saw into alignment.

But the advantage to these jigs is that they take a lot of the guesswork out of the equation by allowing you to "see" exactly how much your saw is out of alignment. And as a diagnostic tool, they're hard to beat when it comes to tuning up your table saw for accurate results. W

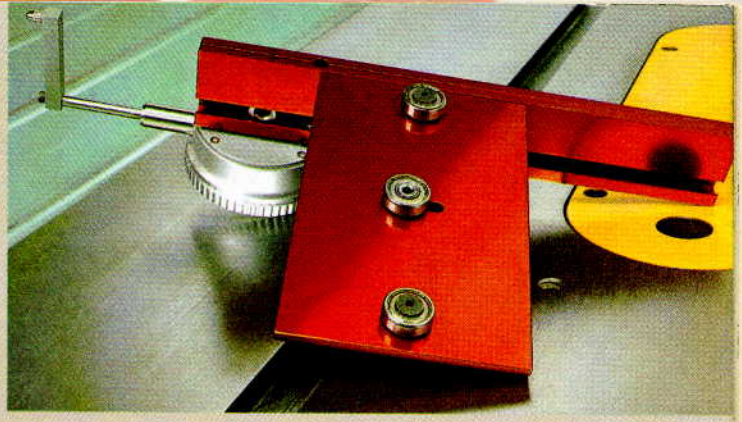

▲ By adjusting one of three ball bearings on the underside of this jig, you can take up any play between the jig and the miter gauge slot of your table saw.

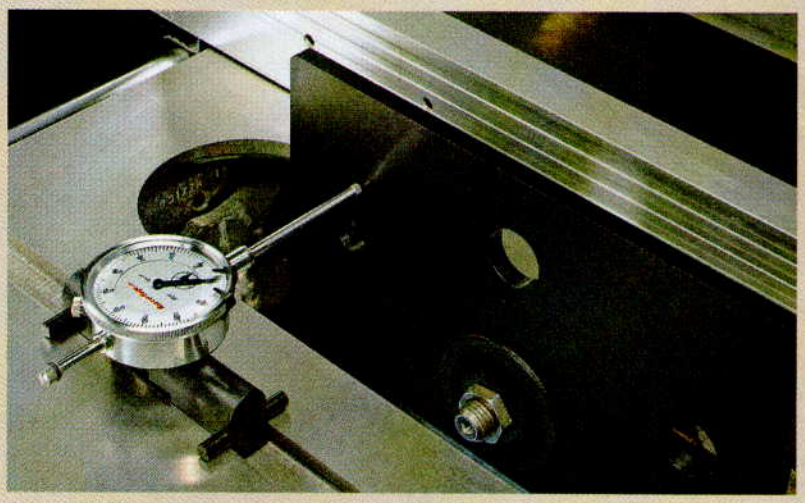

▲ A machined, aluminum reference plate that allows precision readings can be purchased separately from the makers of the *SuperBar* jig.

How-To: Make Other Alignment Checks

One of the advantages of these alignment jigs is the fact that they can be used to check several different settings on your table saw (or even on other tools in your shop).

FLANGE RUNOUT. By placing the tip of the indicator against the flange of your table saw arbor and slowly rotating the arbor by hand, you can measure arbor runout (left photo).

RIP FENCE ALIGNMENT. To check the alignment of your rip fence with the miter gauge slot (and blade), place the tip of the indicator against the fence and zero out the dial. Then take readings at several other points along the length of the fence to make sure it's parallel with the miter gauge slot (right photo).

▲ **Runout.** Place the tip of the indicator on the face of the flange and rotate the arbor by hand to check for flange runout.

▲ **Rip Fence.** Placing the indicator against the rip fence allows you to check it for parallel alignment with the miter gauge slot.

letter Bin

Lattice panels and gentle curves give this project an attractive design.

There's something about lattice panels that I've always found intriguing. I don't know if it's the evenly spaced, grid-like design or the way the pieces lock together like building blocks. But making lattice panels with half-lap joints is something that every woodworker should try at least once. And this mail bin is the perfect project for that. It's great looking, yet small and simple enough to build in a weekend.

making the CASE FRAME

This project can be broken down into two major sections — the case and the dividers. The case is made up of two rails, two sides, and a plywood back. I started by making the rails and sides, as shown in the drawing at right.

The sides and rails are cut from ½"-thick stock. I started by cutting the blanks to overall size. But I held off on cutting the curves on these pieces until all the joinery had been completed.

JOINERY. The first step in making the joinery for the case frame is to cut a rabbet on the inside edge of each piece. This rabbet, which you'll find dimensioned in detail 'c,' will hold the plywood back that's added later.

Once the rabbets are cut, you can make the notches in the ends of each piece that lock all the parts together. Using a dado blade on my table saw, I cut the long notches on the two side pieces first (detail 'a').

Then I cut shorter notches on the ends of the upper and lower rails, as you can see in detail 'b.' I also drilled countersunk shank holes at the ends of each rail for the screws that will be used later to hold all the pieces together.

ARCS. With the joinery completed, the next step is to lay out and cut the arcs on each piece. The box below shows you how to go about doing this. I used a jig saw for this task, but you could also use a band saw if you have one.

BULLNOSE PROFILE. The last step is to rout a bullnose profile on the exposed edges of all four pieces. To do this, I simply used a ⅜"-radius roundover bit in my router table, but I only raised the bit 3/16". You can see how this is done in the third drawing in the box below.

At this point, the work on the frame pieces is complete. But hold off on assembling the case until you've made the dividers. And that's the next step.

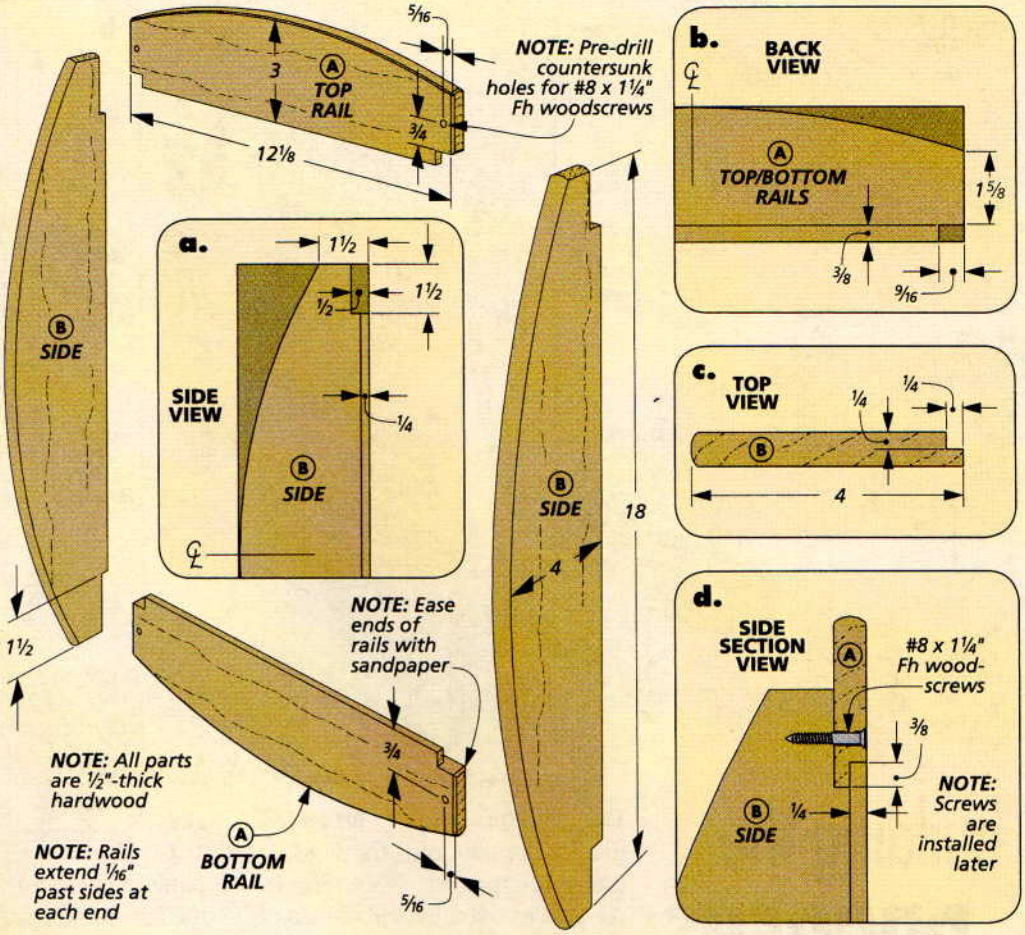

How-To: Shape the Rails and Sides

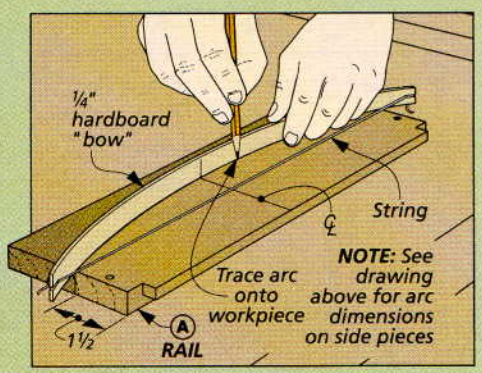

Draw. *Using a "bow" made out of a piece of string and a strip of hardboard, trace the shape of the arc onto each blank.*

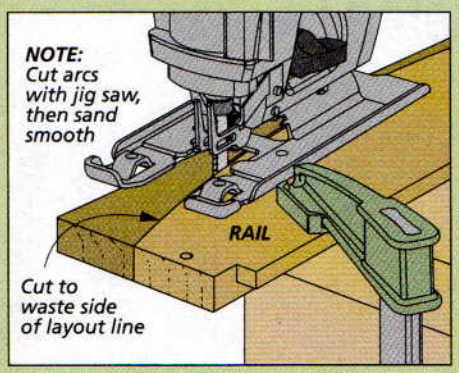

Cut. *Clamp the workpiece to the edge of your bench and cut the arc with a jig saw. Then you can sand the edge smooth.*

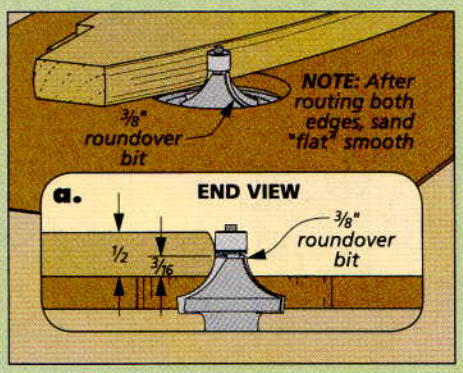

Rout. *To create a "bullnose" on the edge of the workpiece, use a ⅜" roundover bit raisied 3/16". Then sand away the flat spot.*

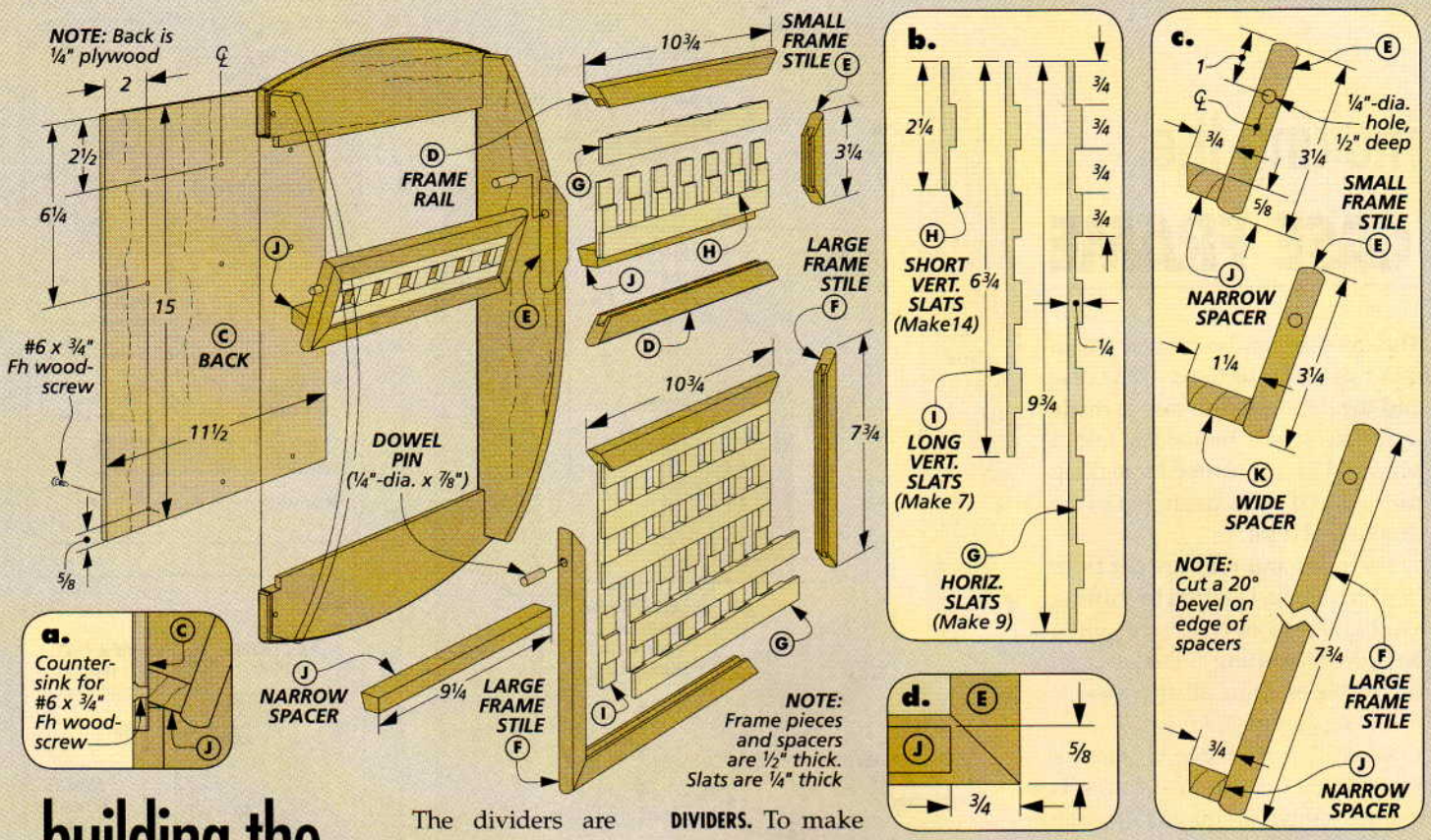

building the DIVIDERS

The dividers are the focal point of the entire project. As you can see in the drawing above, each one is made up of a mitered frame surrounding a lattice panel. A spacer is used to attach each divider to the back of the case.

BACK. Before making the dividers, however, I dry assembled the case pieces and cut a piece of ¼" plywood for the back. You can go ahead and drill the holes for the screws that will attach the dividers. But don't assemble anything just yet. That will come later on.

DIVIDERS. To make the dividers, I started with the lattice panels. These are made up of ¼"-thick strips, joined with half laps. You can find all the information you'll need to make the half laps in detail 'b' above and on the opposite page.

FRAMES. After gluing up the lattice panels, you can begin on the frames. The box below will show you how this is done. The frame pieces are grooved to hold the panel and then mitered to length. One thing to note when trimming the rails to length is that the dividers are sized to fit between the case sides with an ⅛" clearance gap on either side.

Before gluing up the frames, you'll need to drill a hole in each frame stile for a ¼"-dia. dowel that will be added later. Then after gluing up the pieces around the lattice panels, a bullnose profile is routed all around each frame.

SPACERS. In order to create a contact point for each divider to be mounted to the back of the case, I added spacers to the dividers. These are nothing more than beveled strips of hardwood, glued to the back of the dividers, as shown in details 'c' and 'd.' At this point, you're just about ready for assembly.

How-To: Make a Mitered Frame

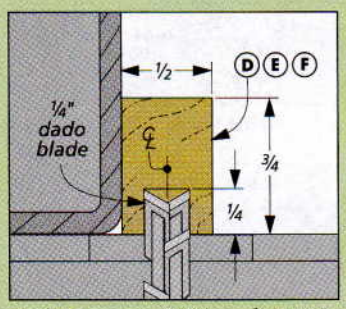

Cut Groove. *With a ¼"-wide dado blade, cut a centered groove on the frame pieces.*

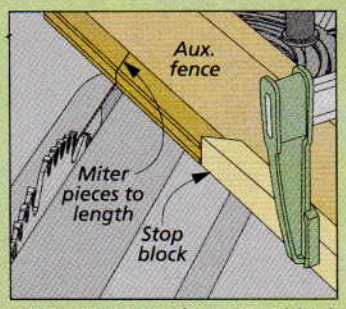

Miter to Length. *A stop block can be used to miter the matching pieces to identical length.*

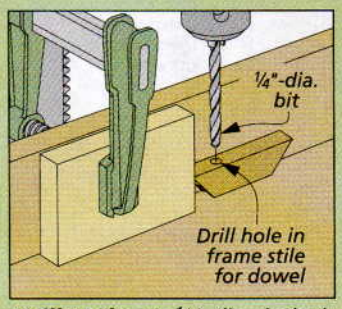

Drill Hole. *A ¼"-dia. hole is drilled in each frame stile for a dowel pin that's added later.*

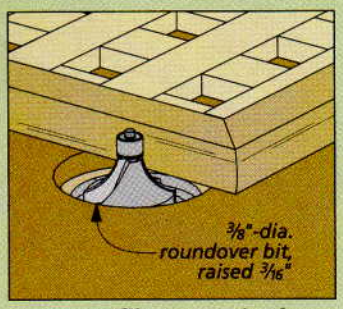

Rout Profile. *Once the frame is assembled, rout a bullnose profile around the edges.*

How-To: Lattice Panels

The lattice panels used in the dividers are made up of individual strips of wood joined with half laps. But rather than trying to work with a bunch of small, narrow pieces, I found it easier to cut the half laps in a wider blank and then rip the individual strips to width. This also ensures that all your half laps will line up.

BLADE HEIGHT. In order for the half laps to fit flush, the dado blade needs to be raised to a height that is exactly half the thickness of the stock. To do this, I like to use a scrap piece of stock as a test piece, like you see in Figure 1. The idea is to make a couple of test cuts, then raise the blade a little at a time until you sneak up on the exact height.

AUXILIARY FENCE. With the dado blade ready to go, you can turn your attention to the miter gauge. By attaching an auxiliary fence to your miter gauge, you can reduce tearout. Plus, it gives you a place to mark the location of the sides of the dado blade, making it easier to line up your workpiece with the blade (Figure 2).

LAYOUT. The next step is to lay out the half laps on your workpiece. To help keep track of the cuts, I marked the waste sections with an 'X' (Figure 3). Once you've got all the half laps laid out, it's just a matter of lining up the workpiece with the marks on your miter gauge fence and making a cut.

Then slide the workpiece down to the second set of lines and repeat the process. The key here is to hold the workpiece down on the table saw with consistent pressure as it passes over the blade. This will ensure that all your dadoes end up the same depth.

CUT STRIPS TO SIZE. After cutting all the dadoes, you can rip the strips to width. Since the strips are so narrow, I used a push block like you see in Figure 4. Then the last step is to cut the individual pieces to length (Figure 5).

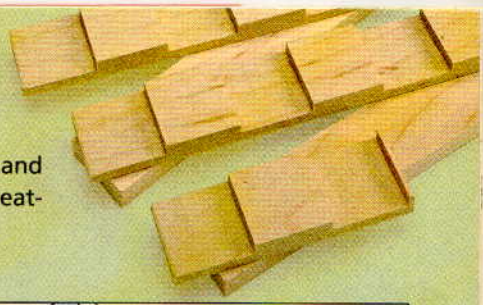

► Half-lap joints allow the vertical and horizontal strips to interlock, creating a flat lattice panel.

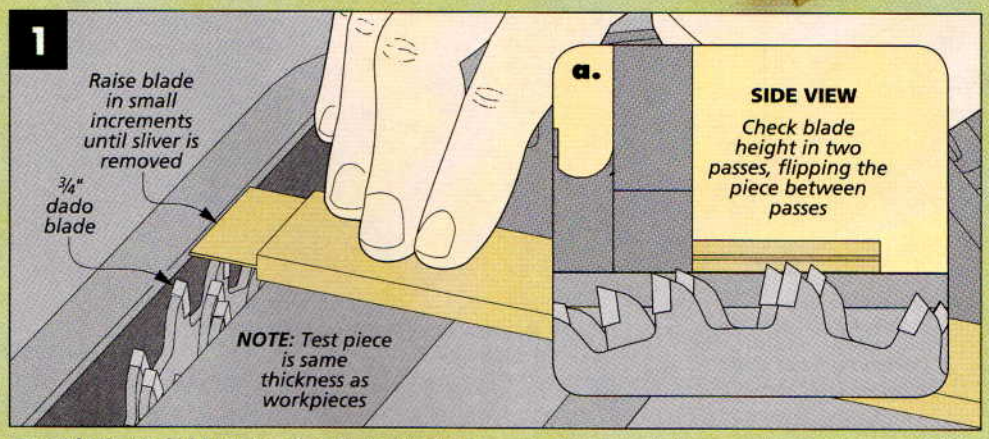

Set Blade Height. *Raise the dado blade to just a hair under half the thickness of your frame stock. Then, using a piece of the frame stock as a test piece, make a cut on each side. Raise the blade and repeat the process until the blade removes the thin sliver of wood.*

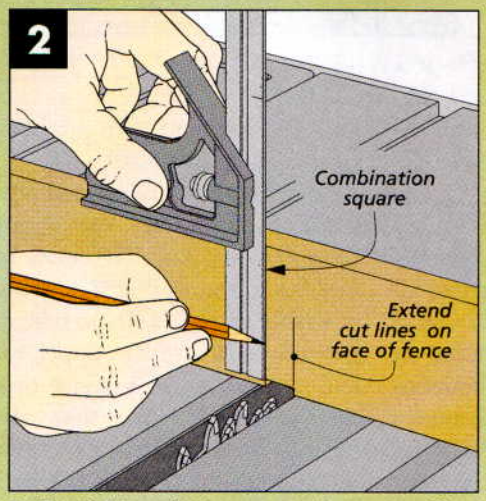

Index Lines. *Make a cut in an auxiliary fence attached to your miter gauge and then extend the edges of the cut with pencil lines.*

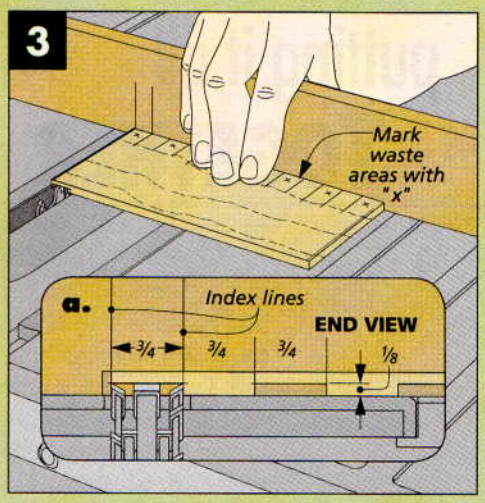

Make Cuts. *After laying out the half laps on your workpiece, start cutting the dadoes by lining up your marks with the index lines.*

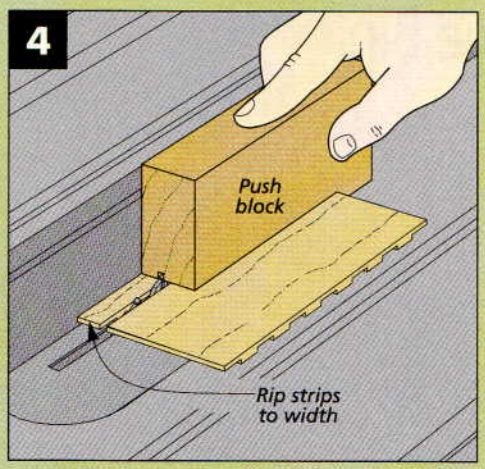

Cut Strips from Blank. *After cutting all the dadoes, rip the strips to width. A push block keeps your hands away from the blade.*

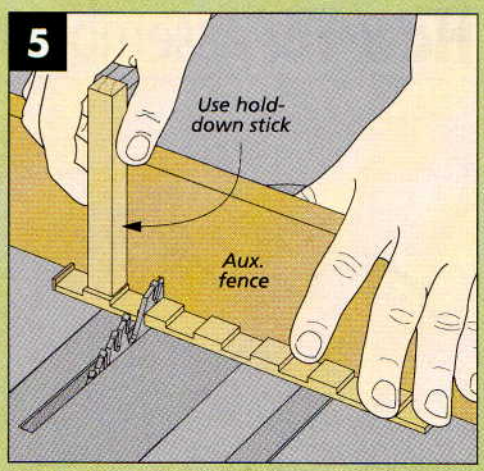

Cut to Length. *The short, vertical strips can be cut to length from longer strips. A block of wood helps hold the workpiece down.*

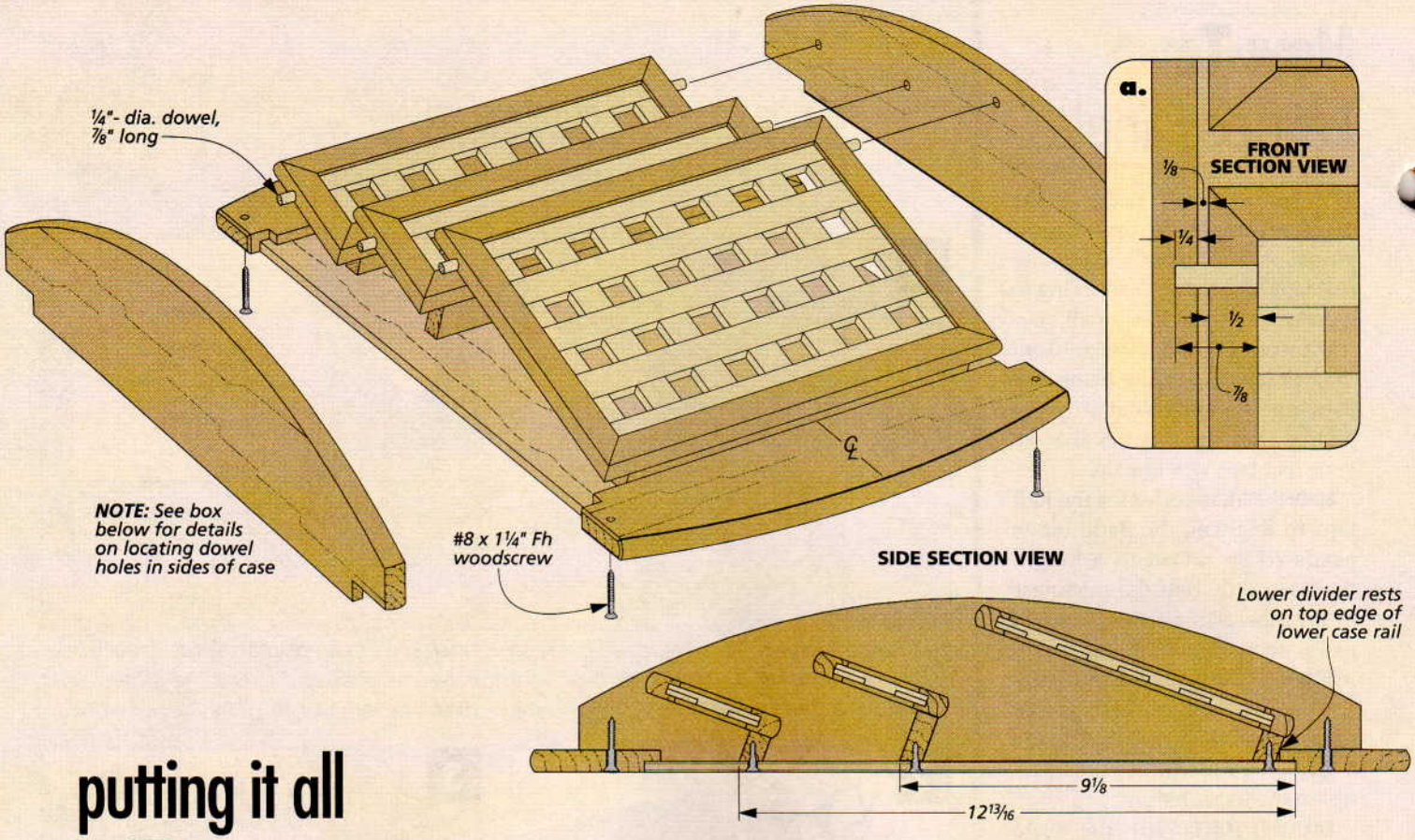

putting it all TOGETHER

At this point, the main components of the letter bin are complete; all that remains is to assemble everything. But before getting started on this, I want to talk a little about finishing. Because of all the openings in the lattice panels, it's a good idea to finish the individual components before you begin assembling them. I just masked off any glue surfaces and then applied a clear lacquer finish.

KEYHOLE HANGERS. There's one other detail to mention before beginning the assembly. The letter bin mounts to the wall with a couple of keyhole hangers. These hangers get mortised into the upper rail, and it's a lot easier to make these mortises now, rather than after the case is assembled. (For more on making the mortises, turn to Shop Notebook on page 33.) Once the mortises are finished, you can go ahead and screw the keyhole hangers in place.

ASSEMBLY. With the preliminary details out of the way, you can finally begin on the actual assembly process. If you take a look at the drawing above, you'll notice that the dividers are sandwiched between the sides of the case and screwed to the back. And for added support, the dividers are also pinned to the sides with dowels.

The trick is locating the holes for the dowels in sides so that

How-To: Assemble the Bin

Layout Lines. *Draw layout lines on the case back to locate and center the positions of the two upper dividers.*

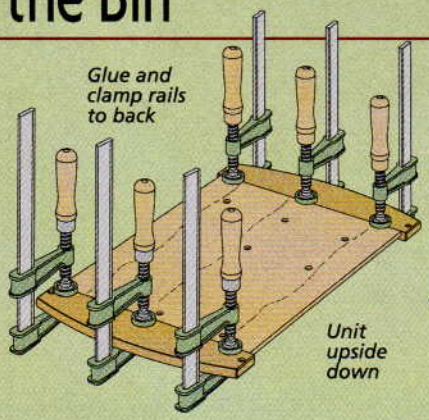

Glue Rails to Back. *Glue the back into the rabbets in the case rails, keeping it centered between the ends of the rails.*

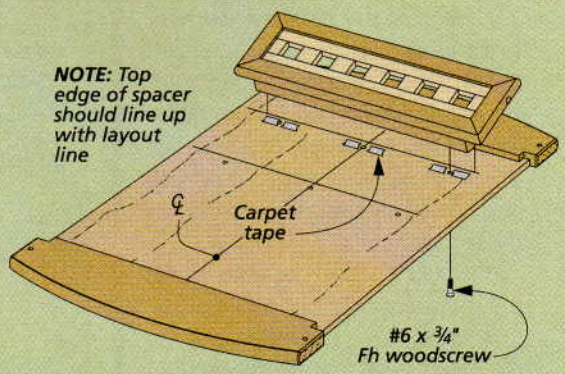

Add Dividers. *Place the dividers on the layout lines and use carpet tape to hold them in place. Then, screw them to the case back.*

they line up with the dowel holes in the dividers. The box below should give you a good idea of how this is done, but I'll walk you through the process as well.

LAYOUT LINES. To start with, draw a couple of layout lines on the case back to indicate the location of the two upper dividers. These layout lines should be positioned just above the screw holes that are already drilled in the back.

Next, glue the case rails to the back panel. Once the glue is dry, you can attach the dividers to the back of the case. To do this, simply use some small pieces of carpet tape to hold each divider in place on the back panel.

The spacers on the two upper dividers should line up with the layout lines you drew earlier. And the lower divider should rest on the top edge of the lower case rail. Then the dividers can be screwed in place from the back, as you see in the side section view on the opposite page.

DOWEL HOLES. You've already drilled the holes for the dowels in the edges of the divider frames. The goal now is to drill aligning holes in the sides of the case. An easy way to do this is to use dowel centers to transfer the hole locations to the sides of the case, as shown in the box below.

After transferring the hole locations to the sides of the case, you can drill the ¼"-dia. holes for the dowels, just like you see in detail 'a' on the opposite page.

ASSEMBLY. With the holes drilled in the case sides, you can now assemble everything. Start by installing the dowels in the dividers. Then glue the case sides to the case back and rails. Finally, you can screw the rails to the case sides to complete the project. W

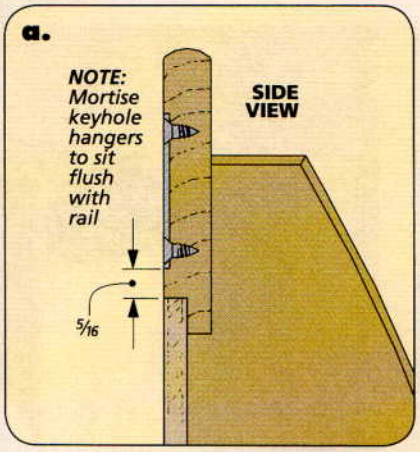

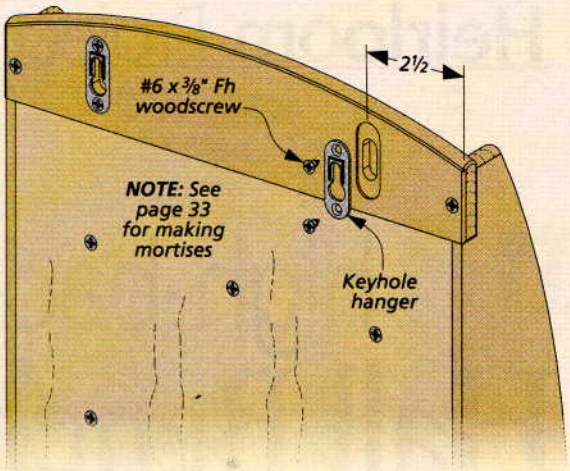

Materials, Supplies, & Cutting Diagram

A	Case Rails (2)	½ x 3 - 12⅛
B	Case Sides (2)	½ x 4 - 18
C	Back (1)	¼ ply. - 11½ x 15
D	Frame Rails (6)	½ x ¾ - 10¾
E	Small Frame Stiles (4)	½ x ¾ - 3¼
F	Large Frame Stiles (2)	½ x ¾ - 7¾
G	Horizontal Slats (9)	¼ x ¾ - 9¾
H	Short Vertical Slats (14)	¼ x ¾ - 2¼
I	Long Vertical Slats (7)	¼ x ¾ - 6¾
J	Narrow Spacers (2)	½ x ¾ - 9¼
K	Wide Spacer (1)	½ x 1¼ - 9¼

- (9) #6 x ¾" Fh Woodscrews
- (4) #8 x 1¼" Fh Woodscrews
- (6) ¼"-dia. Dowels (⅞" long)
- (2) Keyhole Hangers w/Screws

ALSO NEEDED:
One - 24" x 48" sheet ¼" Maple plywood

½" x 8½" - 74" Maple (4.4 Sq. Ft.)

NOTE: Parts G&H cut from oversize blank

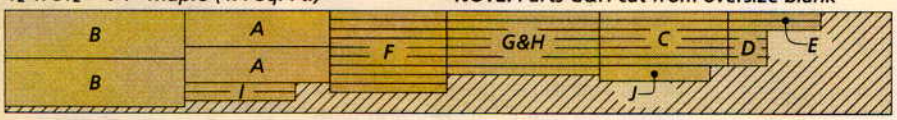

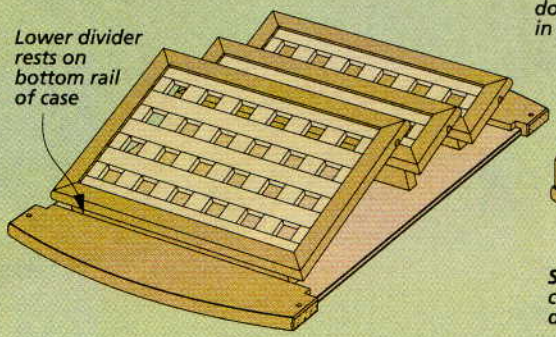

Add Lower Divider. *The lower divider is simply positioned so it rests on the top edge of the lower rail. Then it is also screwed in place.*

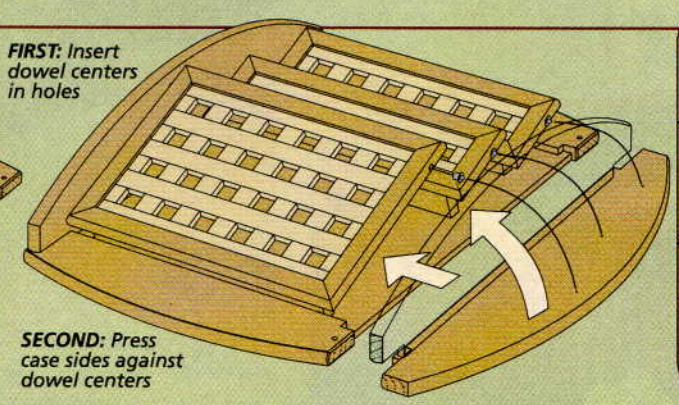

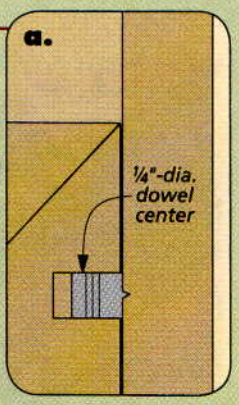

Transfer Hole Locations. *Place dowel centers in the holes in the edges of the dividers. Then carefully bring the sides into position and press them firmly against the dividers. The dowel centers will leave a mark at each hole location.*

high-back Hall Bench

Solid frame and panel construction makes this bench as sturdy as it is attractive.

A hallway storage bench that also offers a place to hang coats is a practical and good-looking solution to entryway clutter. And this high-back bench is sure to get lots of admiring looks in any location.

It's also a great project to give your shop skills a workout. Both the bench and the upper assembly use frame and panel construction with stub tenon and groove joinery.

The choice of wood also contributes to the classic look. I used riftsawn oak for the frames and plywood panels. (Refer to the article on page 8 to learn more about wood selection.)

We've also included an option for building a simplified bench. Either way, this piece is sure to be a welcome addition to any home.

◄ This design also gives you two options for building the bench as a stand-alone piece. See Designer's Notebook on page 27 for more details.

CONSTRUCTION DETAILS

OVERALL DIMENSIONS:
36"W x 17"D x 71"H

FRONT SECTION VIEW

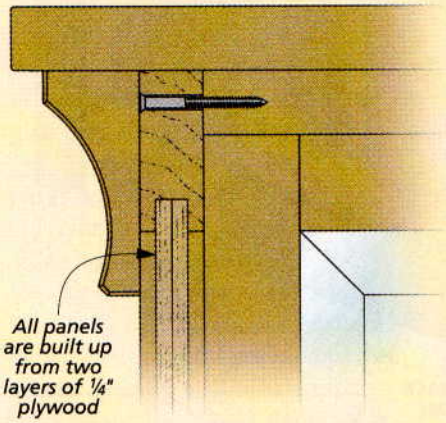

BENCH JOINERY DETAIL

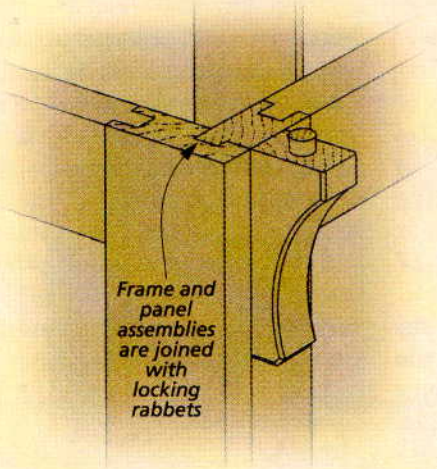

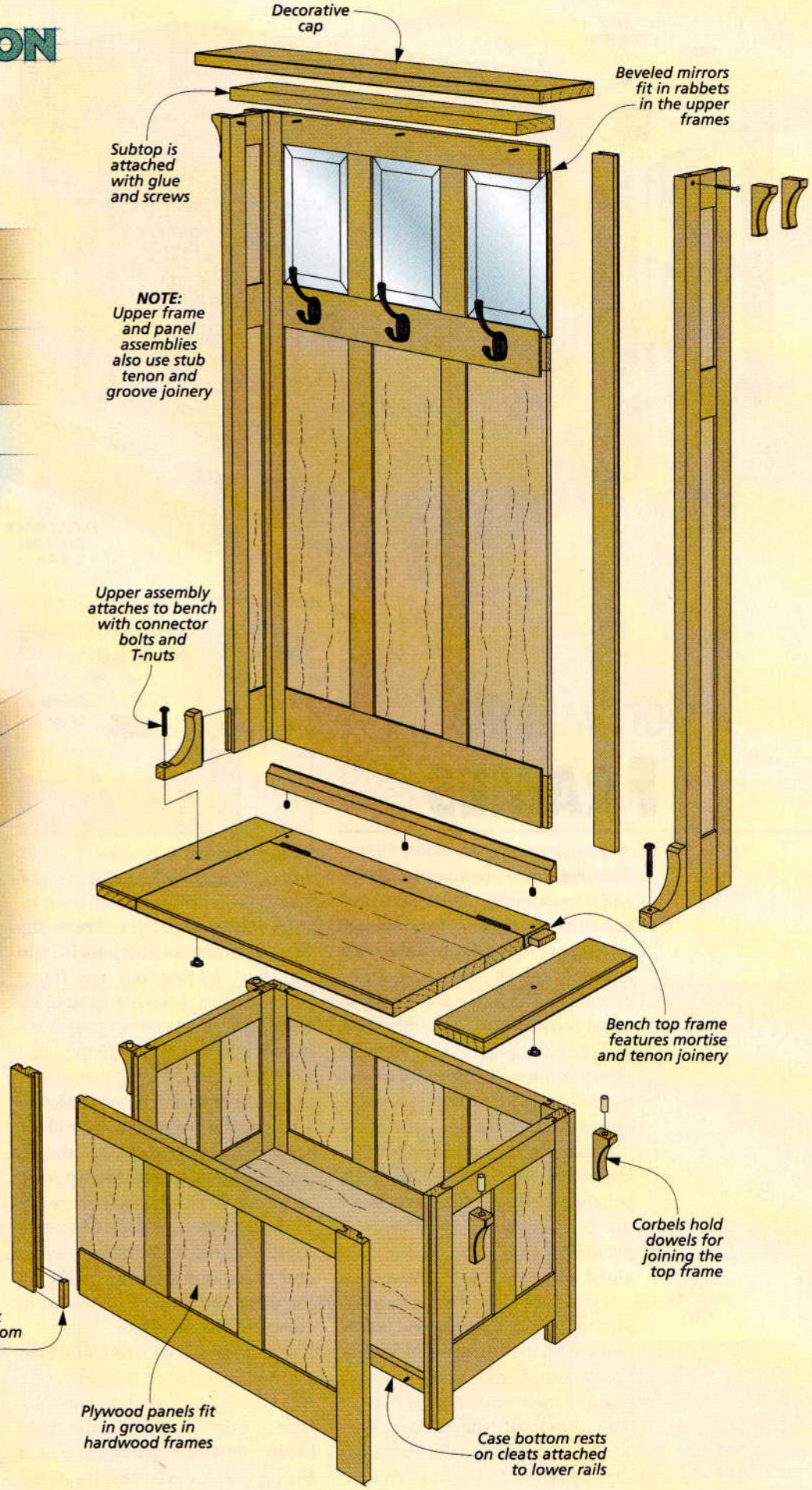

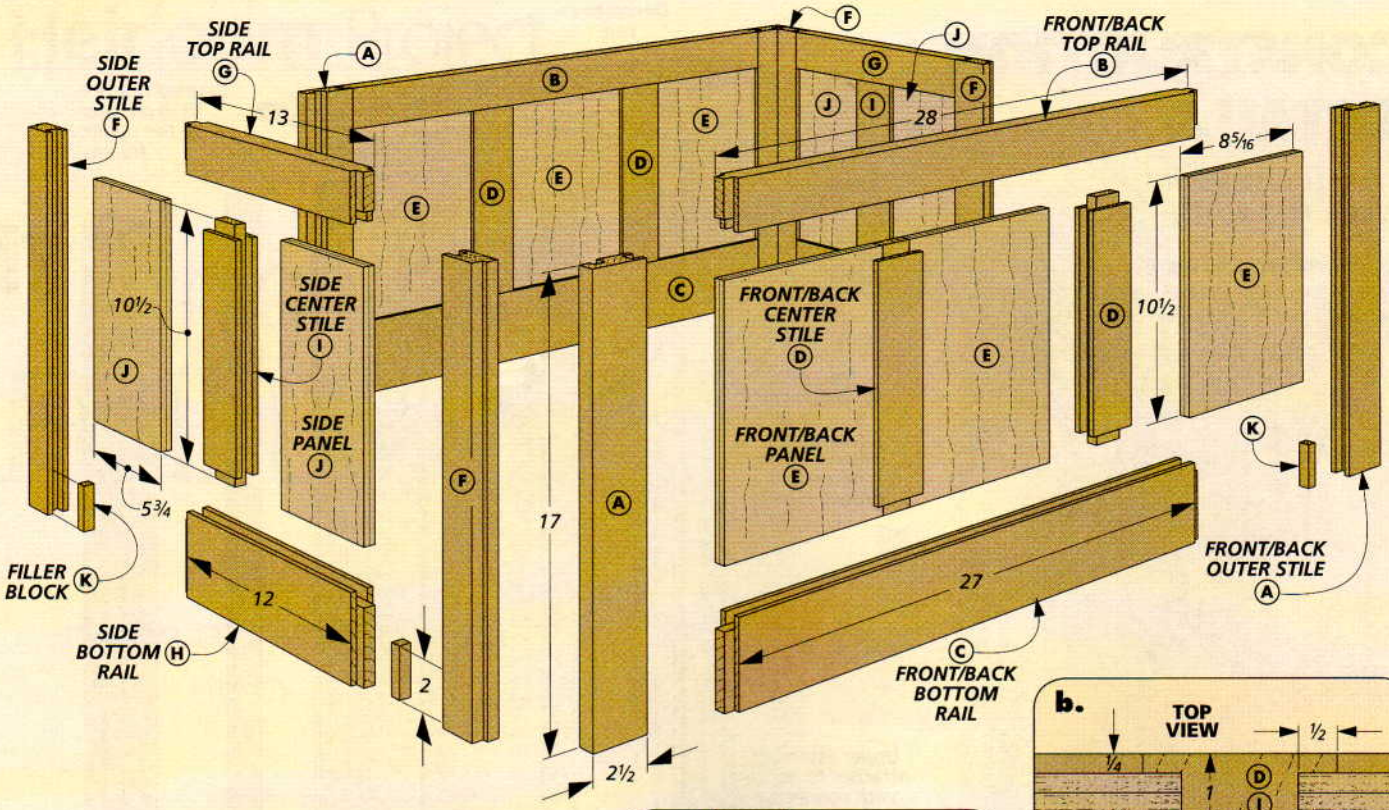

start with the FRAMES

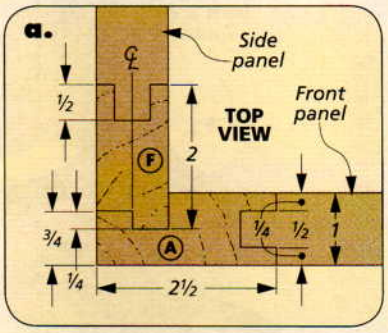

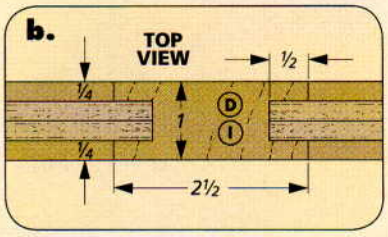

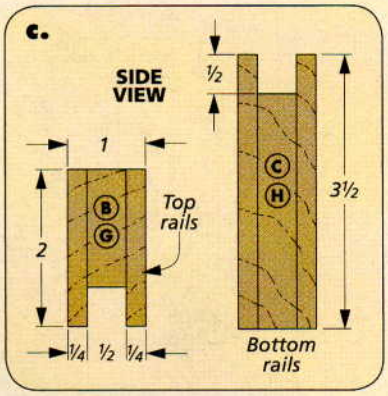

The case for the bench section serves as the foundation for the entire project. It needs to be sturdy enough to support the weight of the back assembly as well as someone sitting on the lid. The frame and plywood panel construction uses stub tenon and groove joinery to guarantee plenty of strength. This design also makes it easy to build the project in individual sections.

PANELS. Before getting started, I want to talk a little about the panels. I used ½"-thick panels for the bench, but ½" cabinet-grade plywood can be hard to find. So I glued up two ¼" panels instead.

If you use this method, it's a good idea to glue up the plywood before moving on to the frames. This way, you'll know the exact thickness of the panels and can cut matching grooves in the frame parts. You'll also want to make the panels slightly oversize so you can trim them to their final size later.

THE FRAMES. Once you know the final thickness of the panels, you can start cutting out the frame pieces. To help keep things straight, I worked on the front and back frames first (since they're the same size), then moved on to the sides.

After cutting the rails and stiles to size, you can switch to a dado blade in the table saw and cut the grooves for the panels. Rather than trying to match the width of the blade exactly to the panels, I set the dado blade a little narrower (about ¼"-wide) and made one pass, then flipped the piece and made another cut to complete the groove.

You'll want to experiment with a piece of scrap to get the perfect fit. But I think you'll find this method is easier than shimming the dado blade to the exact width to match the plywood. And it also keeps the groove centered on every piece.

STUB TENONS. Now that you've cut grooves in the rails and stiles, you're ready to cut the stub tenons on the rails and center stiles. These tenons will fit into the grooves (like the plywood panels). Here again, a test piece is the key to setting up your saw to make the cuts. You'll want to get a fit that's snug, but not tight enough to require much force or clamping pressure to assemble.

For more detailed information on how to cut tight-fitting stub tenon and groove joinery, check out the article on page 40. One more thing: Don't forget that the center stiles get grooves on both sides and tenons on the ends as well.

ASSEMBLING THE FRAMES. At this point, you're ready to trim the panels to their final size and glue up the frames. Since the panels are plywood, you won't need to worry about them expanding or contracting during seasonal changes in humidity. This means you have the option of using glue in the grooves. But if the panels fit tightly in the grooves, you can skip the glue and avoid the problem of glue squeeze-out in the joints on the frames.

I clamped the center stiles and panels between the upper and lower rails first. This way I had a chance to make sure the edges of the panels and the tenons lined up well before moving on. Then you can add the outside stiles, attaching them to the rails.

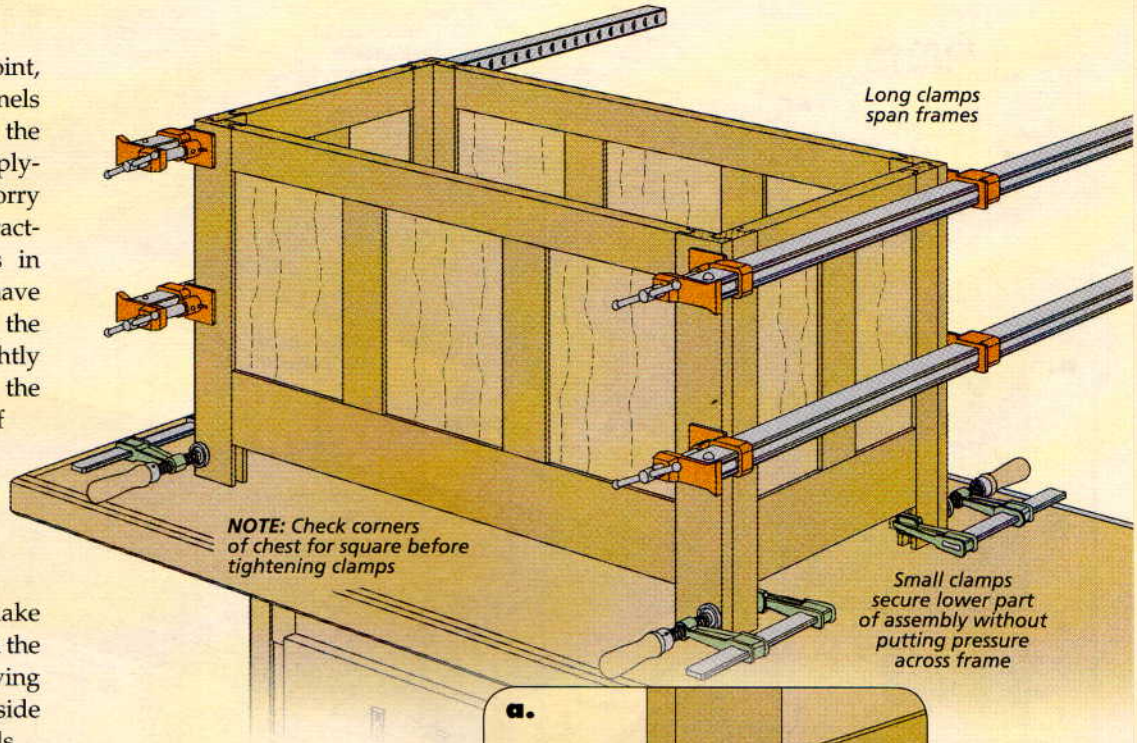

CONNECTING THE FRAMES. After you've completed the front, back, and side frames, it's time to cut the locking rabbet joinery that will hold the frames together. Now you could have cut these joints on the end stiles before assembly, but I find it easier to keep track of everything by cutting the joints after assembling the frames. And since these frames aren't too big, they're easy to work with at the table saw.

The locking rabbet is a very strong joint for case construction. In addition to the mechanical lock of this joint, it also offers increased glue surface for extra strength. The box below explains the process of cutting the parts of the joint.

ASSEMBLING THE BASE. With the joinery cuts complete, it's a good idea to dry fit the assembly and plan your clamping strategy. As you can see in the drawing above, I used small clamps to hold the bottom of the joints secure and then added longer clamps spanning the width of the side frames. This way, you'll get even clamping pressure along the full length of the joints.

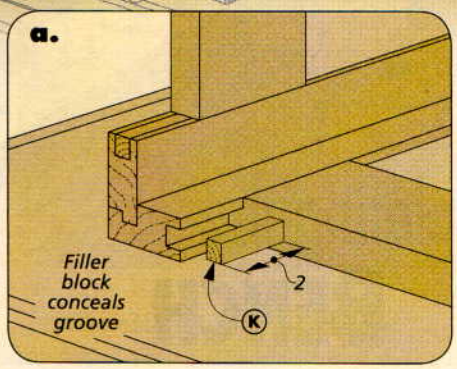

FILLER BLOCKS. All that remains is to fill in the groove below the frames. For this, I just glued some filler blocks in place and sanded them flush with the edge (detail 'a').

How-To: Cut the Locking Rabbet Joint

The locking rabbet is a great choice for the joinery of the bench. It's solid enough to provide a strong connection that won't rack.

I started work on the front and back frames. The first cut is just a groove running the length of the end stiles. For the second cut, you'll need to attach an auxiliary fence, as shown in the center drawing, below. Then, you can make the cut removing the waste to form the tongue.

Now you're ready to cut the rabbet, and in this case that means the side frames. As you can see in the far right illustration, the auxiliary fence covers part of the dado, exposing only ¼" of the blade.

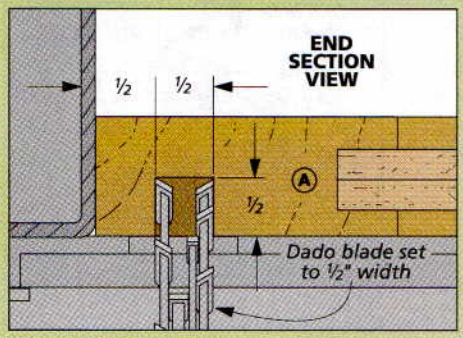

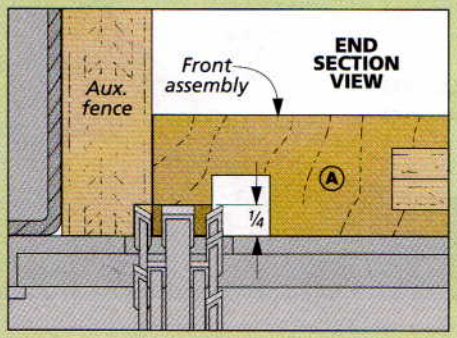

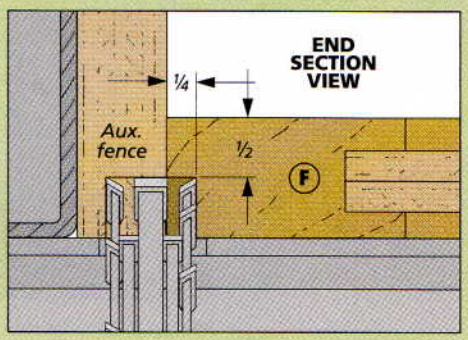

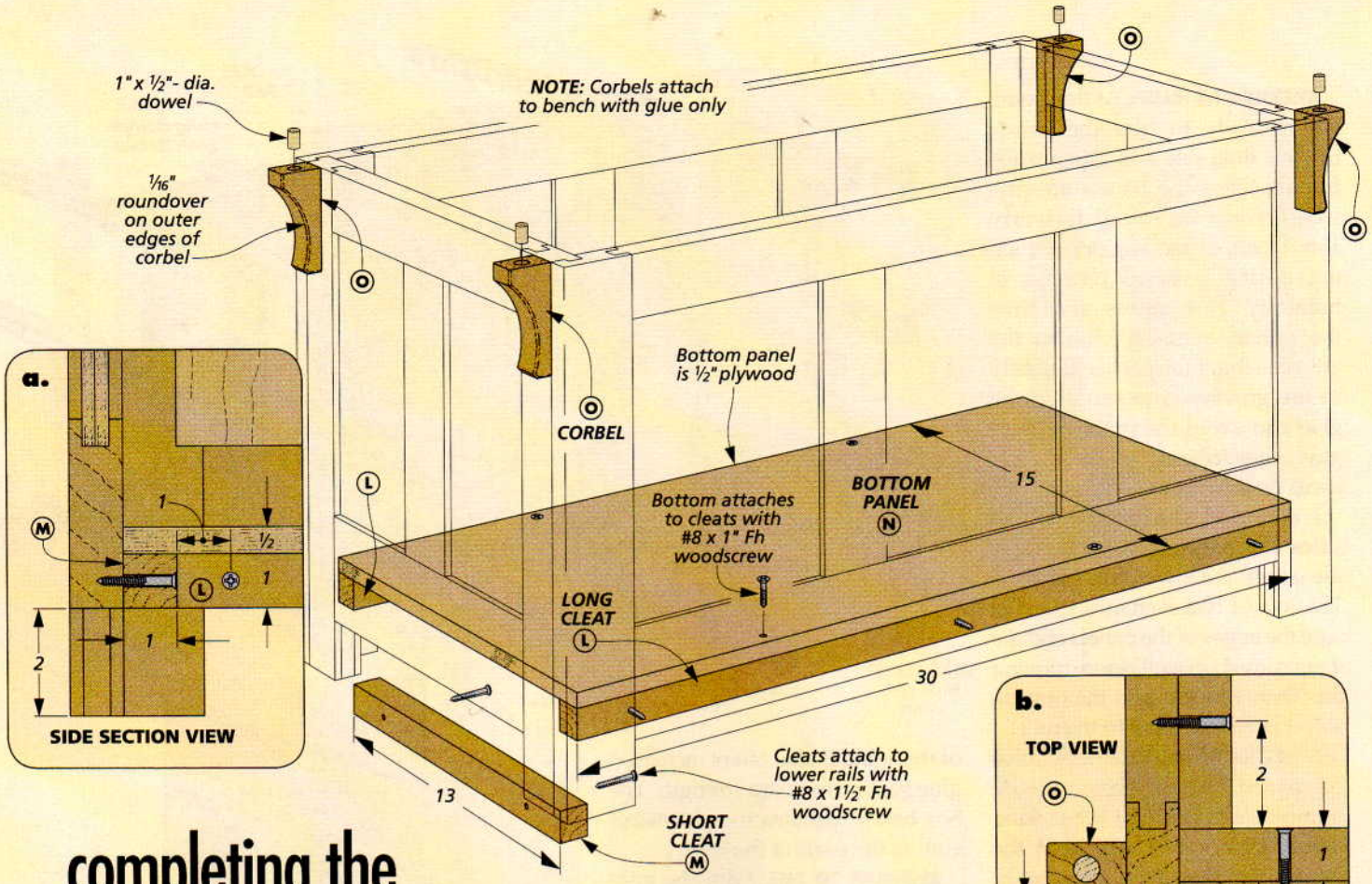

completing the BENCH

With the case assembled, the next few steps will add the top and bottom, as well as the supporting corbels. But before you go any further, you may want to take the time to remove any glue squeeze-out from the inside of the case first. It's more accessible now than it will be later.

ADD THE BOTTOM. The bottom of the storage compartment is just a piece of ½" plywood screwed to cleats attached to the bottom rails of the panels. As the details 'a' and 'b' above show, the cleats are attached with screws in countersunk holes.

I started by cutting the cleats to size and moved on to the drill press to predrill holes for the screws. This way, I was able to clamp each piece in place inside the case and use it as a guide for drilling the matching pilot holes in the rails. Then, you can add glue and attach the cleats. Now it's just a matter of cutting a piece of plywood to size and fastening it to the cleats with screws.

CORBELS. The next step is to add a corbel to each corner of the case. The corbels will help support the top and add a Craftsman-style detail to the bench. Each corbel also holds a dowel that will secure the top. You can see the pattern for the corbels in the full-size drawing below.

While you're at it, if you're going to make the upper assembly of the hall bench, you might as well save yourself some time and make the four corbels for the top. They're identical to the ones used here.

Before cutting the corbels to shape, I drilled the dowel hole (Figure 1, below). Then I used a band saw to cut them to final size and shape. After chamfering the outside edges at the router table, you can glue the corbels to the case.

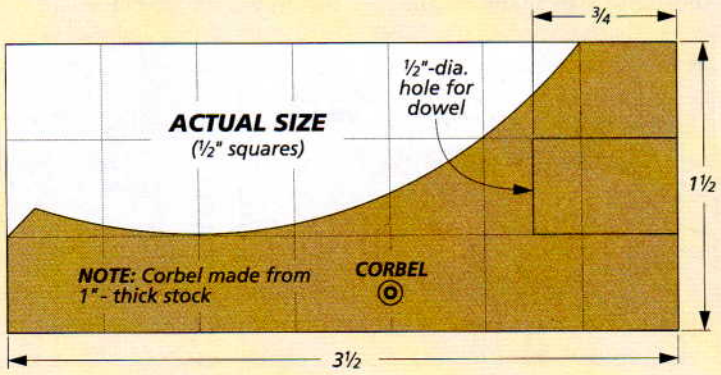

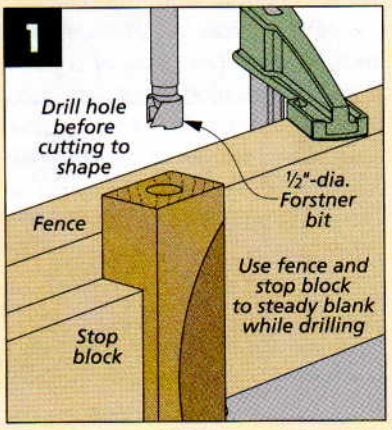

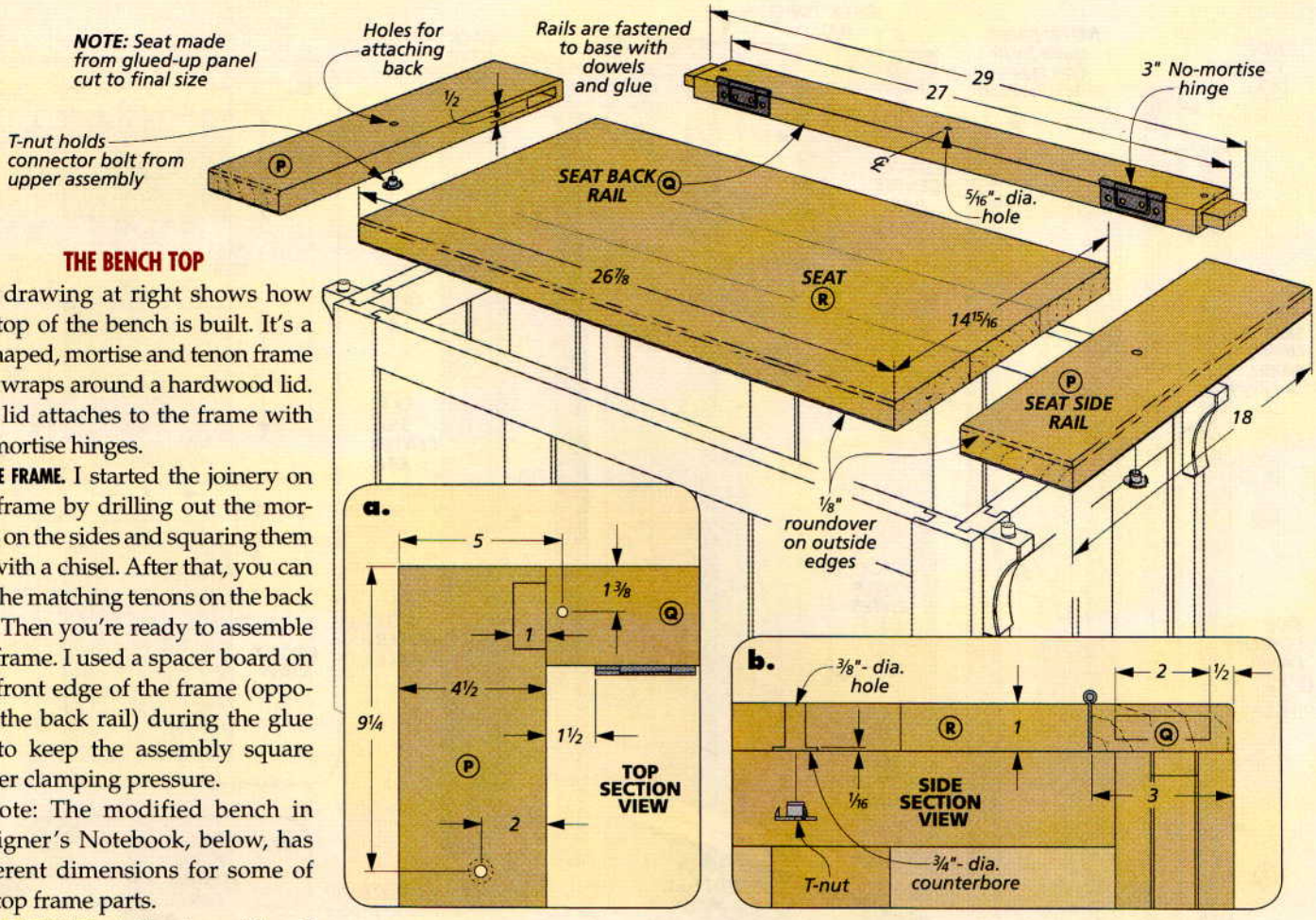

THE BENCH TOP

The drawing at right shows how the top of the bench is built. It's a U-shaped, mortise and tenon frame that wraps around a hardwood lid. The lid attaches to the frame with no-mortise hinges.

THE FRAME. I started the joinery on the frame by drilling out the mortises on the sides and squaring them up with a chisel. After that, you can cut the matching tenons on the back rail. Then you're ready to assemble the frame. I used a spacer board on the front edge of the frame (opposite the back rail) during the glue up to keep the assembly square under clamping pressure.

Note: The modified bench in Designer's Notebook, below, has different dimensions for some of the top frame parts.

FIT THE T-NUTS. A T-nut, positioned on each of the side rails, will be used later to attach the upper assembly. You can drill and counterbore holes to install the T-nuts now.

ADD THE LID. The next step is to glue up a panel for the lid. After the glue dried, I cut the lid to final size.

No-mortise hinges make installing the lid a breeze. I fastened the hinges to the rail with screws first, then attached the hinge to the edge.

ATTACH THE TOP. Fitting the top to the base is made easier by placing dowel centers in the corbels. Then it's just a matter of aligning the top and transferring marks from the dowel centers. Then, drill holes and attach the frame with glue and dowels.

I finished up by rounding over the top edges with a hand-held router. This not only softens the edge but adds a decorative detail.

At this point, you have a complete bench. If you're not planning to build the upper assembly, you can stop here or add the backstop shown in Designer's Notebook, below.

▼ Dowel centers help position matching holes.

DESIGNER'S NOTEBOOK

Short Backstop

The bench also makes for handy stand-alone storage in any room. This modified design leaves out the corbels in favor of a narrower top frame. It also features low-profile mounting brackets and a curved back rail. After assembling the brackets and rail, you simply attach the back to the bench with connector screws fitting into threaded inserts.

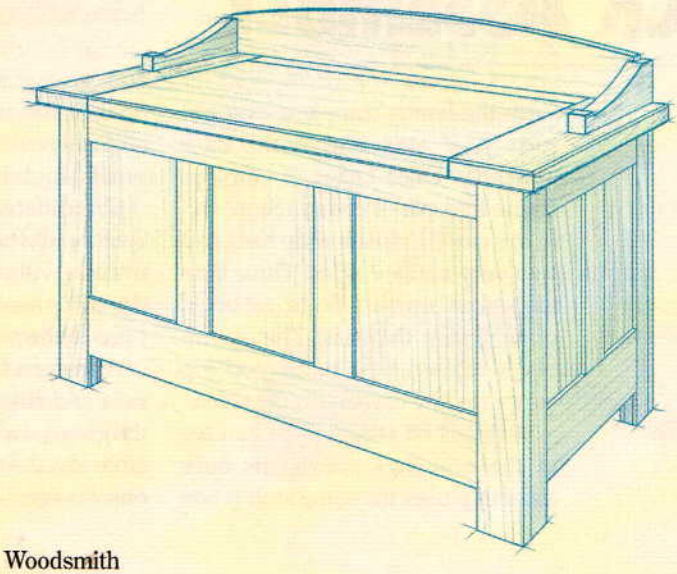

Woodsmith GO ONLINE EXTRAS

For a detailed plan of the modified bench, visit our website at Woodsmith.com

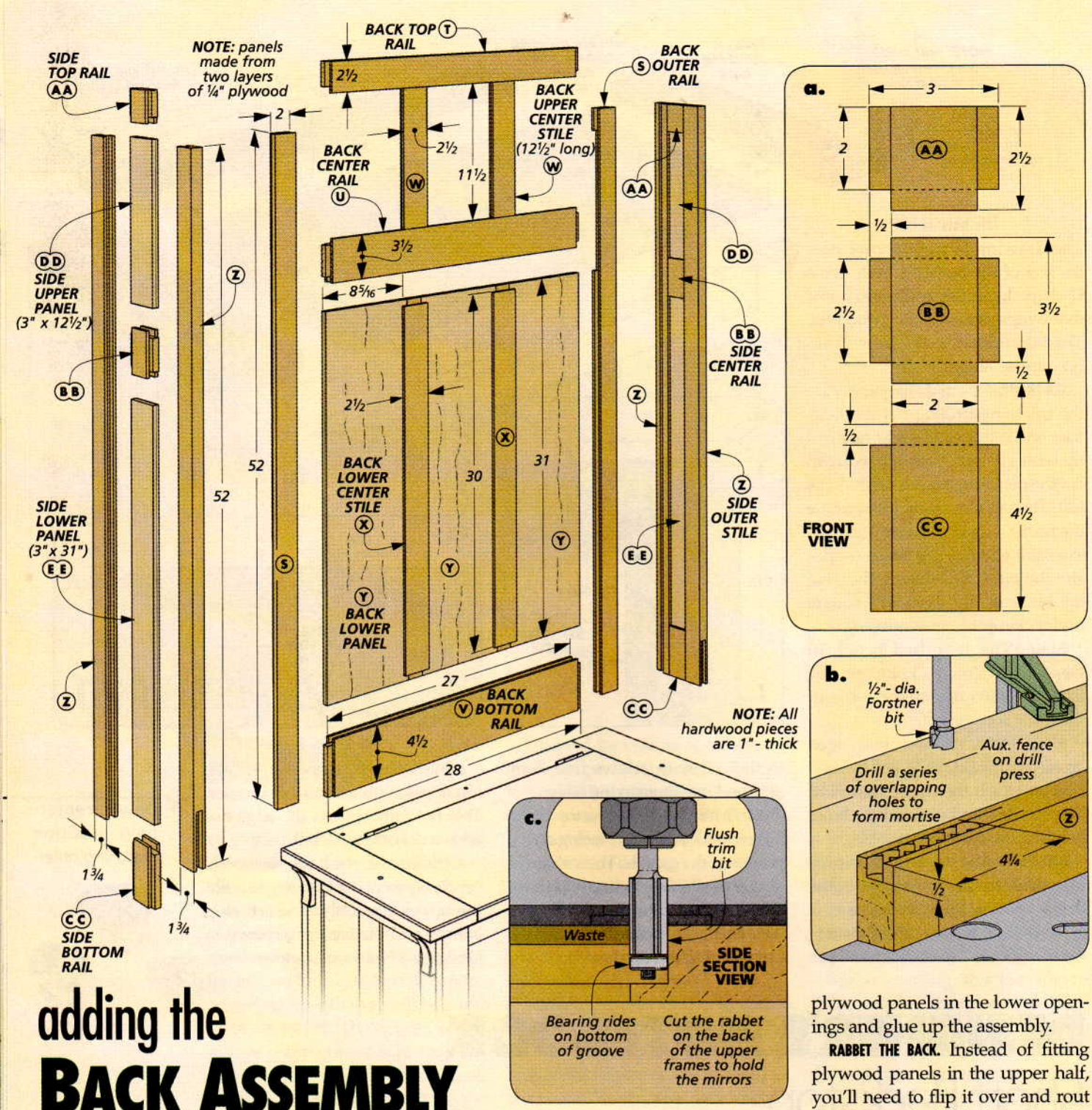

adding the BACK ASSEMBLY

With the bench complete, you can turn your attention to the back assembly. Once again, it employs frame and panel construction. But in this case, it's just a wide back and two very narrow sides. Three beveled glass mirrors fit in rabbeted openings on the back. The assembly is capped by a hardwood top supported by corbels on the sides.

START WITH THE BACK. As you can see in the drawings above, the back assembly uses the same stub tenon and groove joinery as the bench. So the process of building the back and sides will be very similar to what you did earlier.

One difference is the addition of a center rail where the coat hooks and mirrors will be added later. But this doesn't present any real complications in the joinery or assembly.

As before, I started by cutting the rails and stiles to size and then cut the grooves with a dado blade on the table saw. After cutting the stub tenons, you can cut and fit each of the plywood panels in the lower openings and glue up the assembly.

RABBET THE BACK. Instead of fitting plywood panels in the upper half, you'll need to flip it over and rout a rabbet on the back after assembly, as shown in detail 'c.' These rabbets will house the three mirrors.

The rabbets are easier to cut now that the frame is assembled since the size of the opening is defined. You can use your router and a flush trim bit to remove the waste. Just set the depth so the bearing rides on the flat bottom of the groove. Then clean up the corners with a chisel.

THE NARROW SIDES. After you've completed the back, the next task is to build the two sides. They use the same construction techniques as

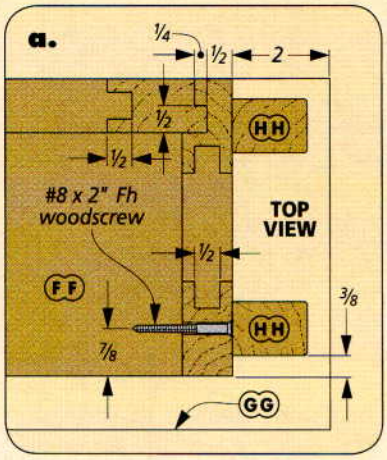

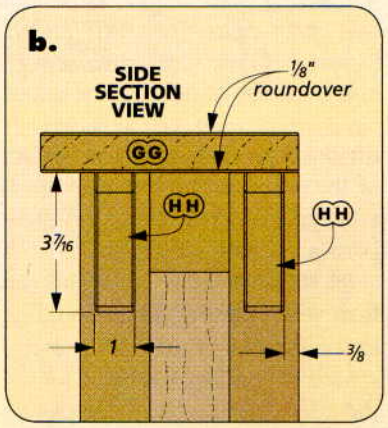

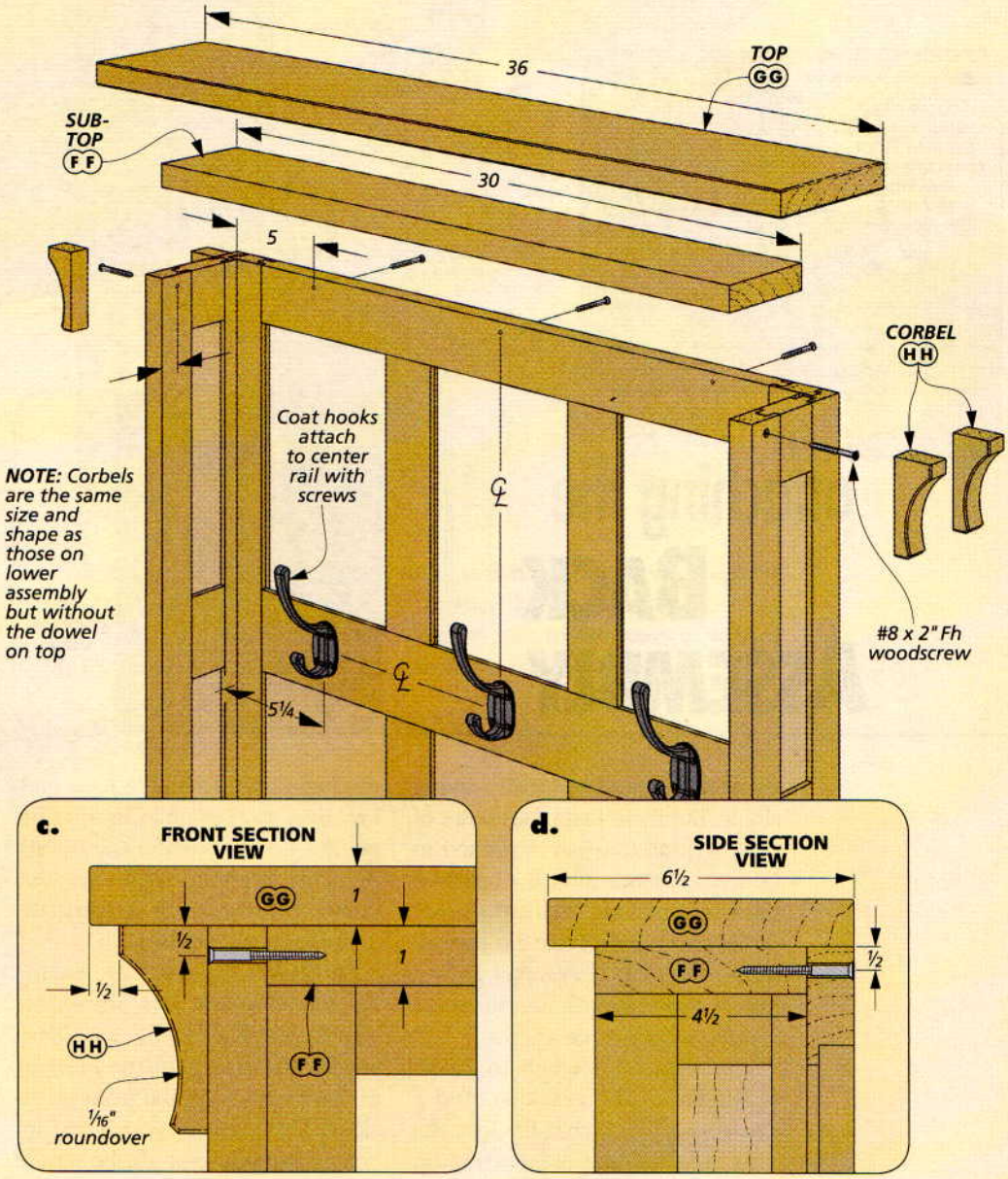

the rest of the project. But because of the short length of the rails, you'll need to take extra care when cutting the grooves and tenons.

The side frames also have an open mortise on the outside edge at the bottom. This mortise will hold a tenon on the support brackets you'll add later. I found it easiest to cut this mortise before cutting the groove on those pieces. I just drilled out the waste as shown in detail 'b' on the opposite page and cleaned up the sides with a chisel. Then you can assemble the side panels.

JOINERY. With the side frames assembled, you can head back to the table saw and make the locking rabbet joinery cuts. This time, however, the back frame gets the rabbet and the sides are grooved, as shown in detail 'a' above. This avoids a visible glue line on the side. Other than that, the process is the same as before. After cutting the joinery, just assemble with glue.

TOPPING THE ASSEMBLY. The drawings above show you how a hardwood sub-top fits between the sides of the back assembly. This piece adds stability and is secured with screws from the sides and back (details 'c' and 'd'). Don't worry, the screw holes on the sides will be covered by the corbels you'll add later.

A hardwood top is glued in place over the sub-top. The upper and lower edges of this piece are rounded over on all sides.

MORE CORBELS. With the top in place, you can attach the corbels to the sides and top with glue. These corbels are identical to the ones used on the bench, but they don't require holes for dowels — they're strictly decorative and are just added to match the bench.

COAT HOOKS. At this point, while the upper assembly can still be laid flat on the workbench, it's a good idea to install the coat hooks. I think you'll find it's much easier to do this now rather than waiting and trying to mark and drill holes with the back upright. The idea here is to keep the hooks centered on the rail and the individual panels.

Once you've drilled the holes, you can install the coat hooks with the matching screws. Refer to Sources on page 51 to find out about the hooks, screws, and other hardware used on this project.

◄ The antique finish hooks add to the Craftsman-style look of the hall bench.

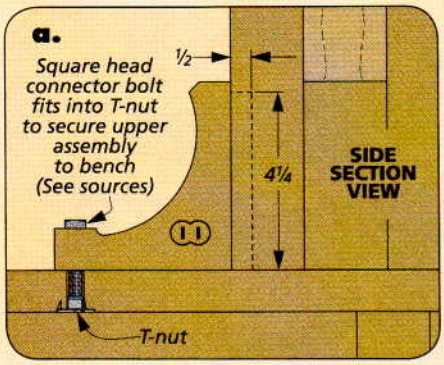

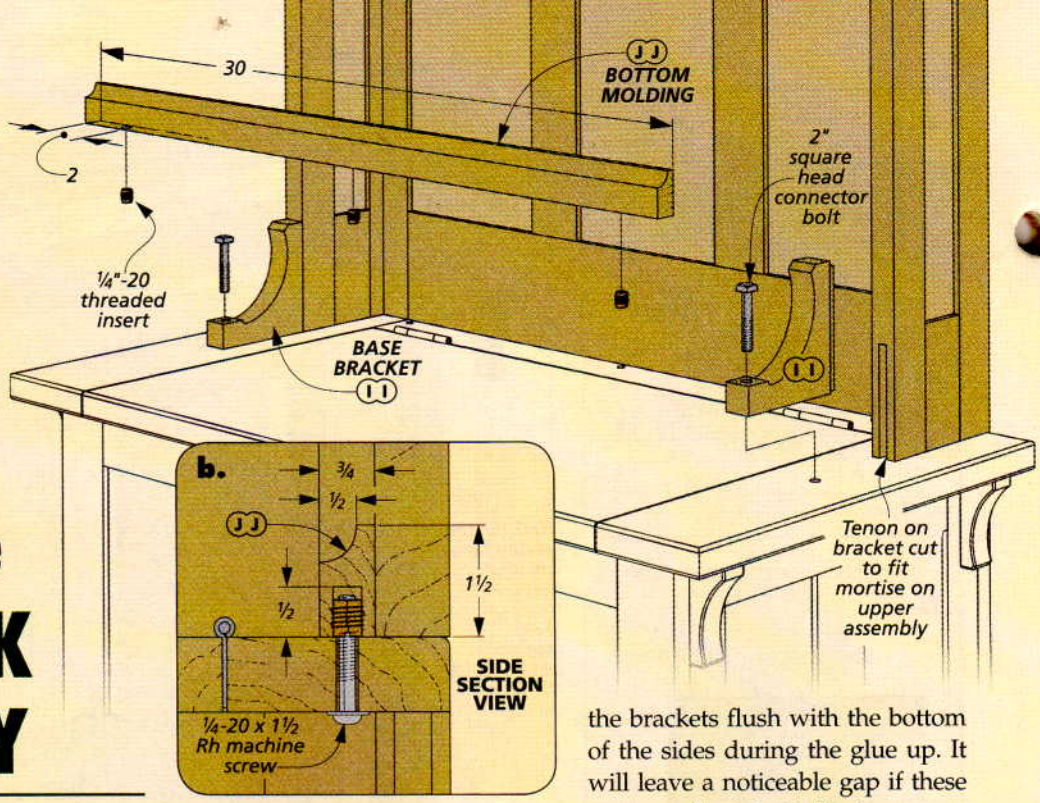

attaching the BACK ASSEMBLY

By now, the project is really taking shape. But there's still the matter of putting it all together. I wanted to be able to disassemble the bench in the future, making it easier to move. So connector bolts were the answer. In the drawings above, you can see how I used these bolts, threaded inserts, and machine screws.

First, I made brackets to attach to the back. The brackets hold a square-head bolt that fits into the T-nuts you installed earlier on the bench top (detail 'a'). Second, I made a strip of molding that fits on the bottom of the back with threaded inserts to accept machine screws in the bench, as shown in the main drawing and detail 'b.'

THE BRACKETS. I started by making the two brackets. The box below shows you how to do this. Then you're ready to glue the brackets in the mortises on the front of the sides. The thing to watch out for here is that you keep the bottom of the brackets flush with the bottom of the sides during the glue up. It will leave a noticeable gap if these parts aren't perfectly flush.

THE BOTTOM MOLDING. Now you can turn your attention to the molding at the bottom of the back panel. I started by drilling the holes for the threaded inserts while the stock was still square. But before installing them, I used dowel centers in the holes to drill the matching holes in the bench top. Next, I moved to the router table and cut the cove profile on the molding. Then just install the threaded inserts and glue the molding in place on the back panel.

How-To: Bracket Details

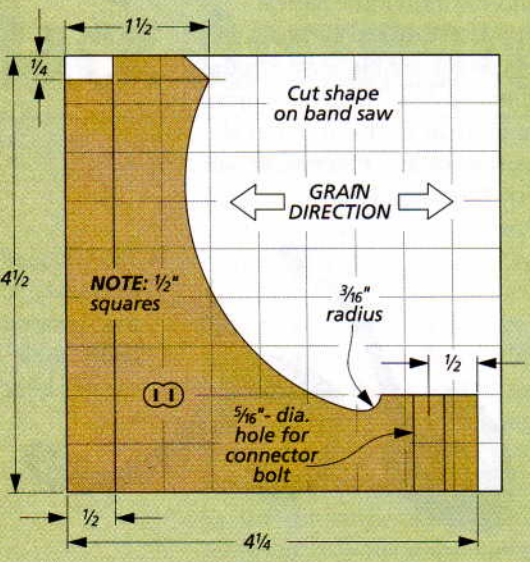

The brackets that hold the upper assembly in place have a tenon to match the mortise on the sides. And since it's easier to cut the tenon while the stock is still square, that's the first step in making them.

I began by burying the dado blade in an auxiliary fence. Then you can cut both sides of the tenon. I finished by nibbling off the top end of the tenon (holding the piece with the miter gauge), as shown at right.

Now you can move to the band saw and cut the brackets to shape. The drawing at left provides the details. Then drill the hole for the connector bolt and finish up by giving the piece a good sanding.

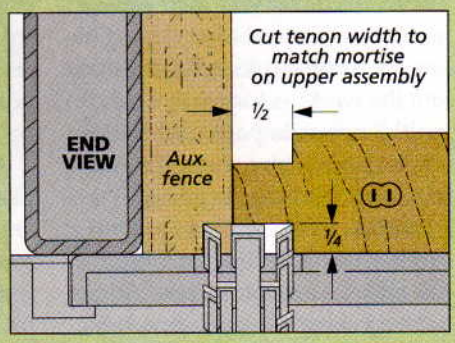

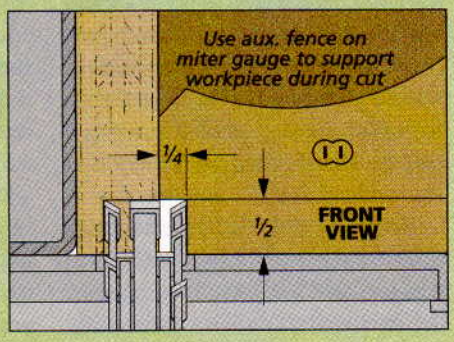

INSTALLING THE MIRRORS. The beveled mirrors really complete the look of the hall bench. And since you've already cut the rabbets in the back of the panel, installing them is a breeze. They fit in the recesses and are covered by ¼" hardboard panels. The panels are held in place with shop-made, quarter-round glass stop. Shop Notebook, on page 33, has all the details for making your own glass stop.

PUTTING IT ALL TOGETHER. After adding the mirrors, the last step is to attach the upper assembly to the bench. The connector bolts and T-nuts make this an easy task. I found it best to connect the bolts in the brackets first, then the machine screws that come up from inside the bench and attach to the threaded inserts in the molding.

After sanding, you're ready to apply a finish. Since you'll be sitting on the bench, you'll need a durable finish (like polyurethane). Then you're sure to get years of service from the hall bench.

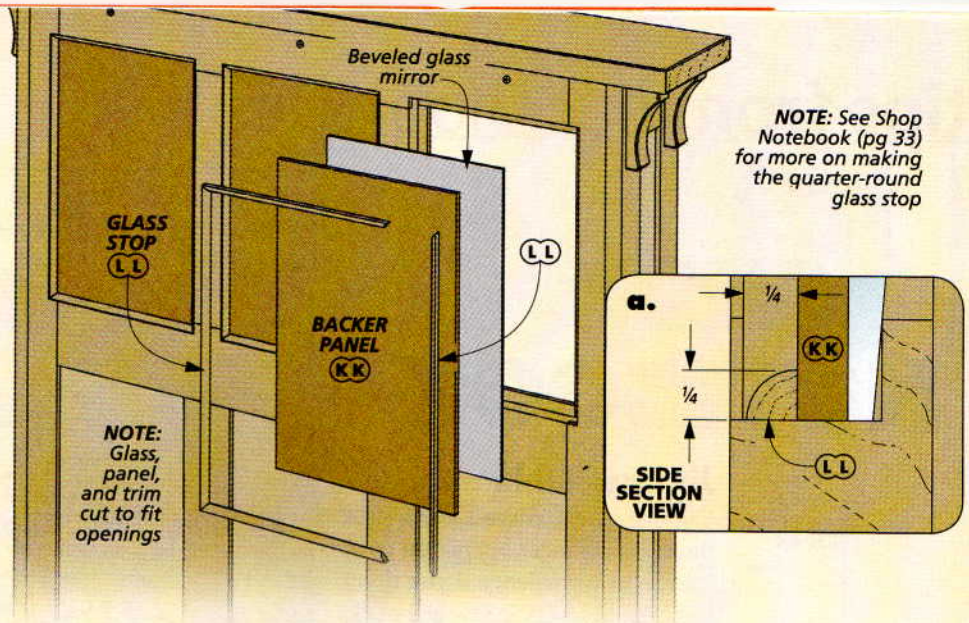

Materials, Supplies, & Cutting Diagram

Bench

A	Front/Back Outer Stiles (4)	1 x 2½ - 17
B	Front/Back Top Rails (2)	1 x 2 - 28
C	Front/Back Btm. Rails (2)	1 x 3½ - 28
D	Front/Back Ctr. Stiles (4)	1 x 2½ - 10½
E	Panels (12)	¼ ply. - 8 5/16 x 10½
F	Side Outer Stiles (4)	1 x 2 - 17
G	Side Top Rails (2)	1 x 2 - 13
H	Side Bottom Rails (2)	1 x 3½ - 13
I	Side Center Stiles (2)	1 x 2½ - 10½
J	Side Panels (8)	¼ ply. - 5¾ x 10½
K	Filler Blocks (8)	½ x ½ - 2
L	Long Cleats (2)	1 x 1 - 30
M	Short Cleats (2)	1 x 1 - 13
N	Bottom Panel (2)	¼ ply. - 15 x 30
O	Corbels (4)	1 x 1½ - 3½
P	Seat Side Rails (2)	1 x 4½ - 18
Q	Seat Back Rail (1)	1 x 3 - 29
R	Seat (1)	1 x 14 13/16 - 26⅞

- (10) #8 x 1½" Fh Woodscrews
- (6) #8 x 2" Rh Woodscrews
- (6) ¼" Flat Washers
- (1 pr) 3" No-Mortise Hinges
- (4) #8 x 1" Fh Woodscrews

Also needed: ¼ ply. - 48 x 96

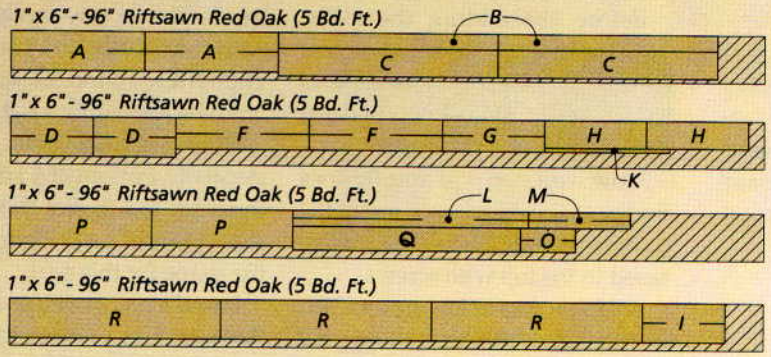

Upper Assembly

S	Back Outer Stiles (2)	1 x 2 - 52
T	Top Rail (1)	1 x 2½ - 28
U	Center Rail (1)	1 x 3½ - 28
V	Bottom Rail (1)	1 x 4½ - 28
W	Upper Center Stiles (2)	1 x 2½ - 12½
X	Lower Center Stiles (2)	1 x 2½ - 31
Y	Lower Panels (6)	¼ ply. - 8 5/16 x 31
Z	Side Outer Stiles (4)	1 x 1¾ - 52
AA	Side Top Rails (2)	1 x 2½ - 3
BB	Side Center Rails (2)	1 x 3½ - 3
CC	Side Bottom Rails (2)	1 x 4½ - 3
DD	Side Top Panels (4)	¼ ply. - 3 x 12½
EE	Side Bottom Panels (4)	¼ ply. - 3 x 31
FF	Sub-Top (1)	1 x 4½ - 30
GG	Top (1)	1 x 6½ - 36
HH	Corbels (4)	1 x 1½ - 3½
II	Brackets (2)	1 x 4½ - 4¼
JJ	Bottom Molding (1)	¾ x 1½ - 30
KK	Mirror Backer (3)	¼ hdbd. - 8 5/16 x 12½
LL	Glass Stop (2)	¼ x ¼ - 96

- (2) ¼"-20 T-Nuts
- (3) ¼"-20 Threaded Inserts
- (3) ¼"-20 x 1½" Rh Machine screws
- (3) ¼" Flat Washers
- (2) ¼"-20 x 2" Square Head Bolts
- (5) #8 x 2" Fh Woodscrews
- (3) Coat Hooks w/screws
- (3) 8¼" x 12½" Beveled Mirrors

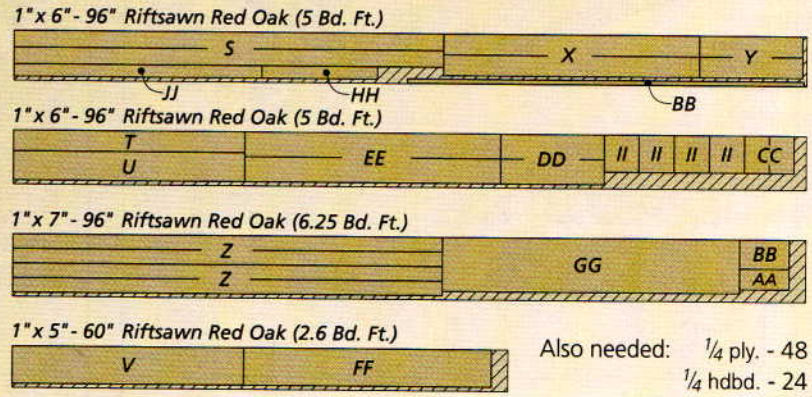

Also needed: ¼ ply. - 48 x 96
¼ hdbd. - 24 x 48

SHOP NOTEBOOK

Jig Saw Table

Cutting small, curved parts (like those for the letter opener on page 34) can be a challenge if you don't own a band saw. A jig saw will work, but trying to hold a small piece while cutting it can be dangerous and usually produces poor results.

To get around this problem, I built the jig saw table shown at right. It allows you to use both hands to guide the workpiece. The design makes installing the saw a breeze.

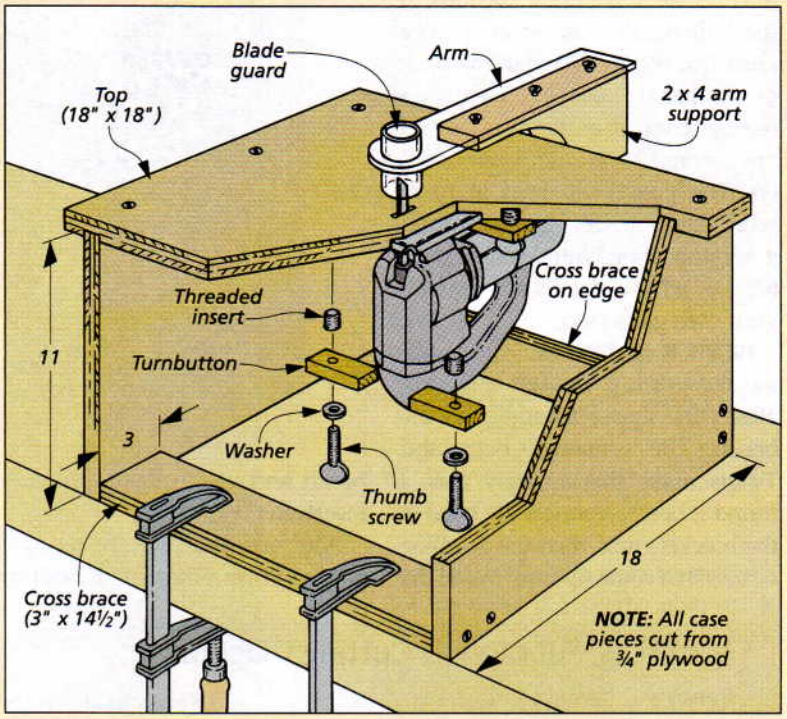

TABLE CONSTRUCTION. Making the table is pretty straightforward, too. It consists of a plywood top, two sides, and a pair of cross braces.

Before assembling the table, you'll need to rout a shallow recess in the top for the saw's baseplate, as shown in Figure 1 below. Then just cut a thin slot for the blade.

Now you can cut the dadoes for the sides. As you can see in the drawing above, the sides are fastened to the top with screws.

A pair of cross braces are attached to the sides on the bottom and along the back edge. These prevent the table from racking and allow the table to be clamped to a workbench. The jig saw can be secured with four hardwood turnbuttons. Thumb screws and threaded inserts hold the turnbuttons tight.

ADDING THE BLADE GUARD. The next step is to cut out the support for the blade guard. For this, I used a short piece of 2 x 4. Figure 2 shows the shape for this part.

I used a piece of clear acrylic for the arm, but you could also use ¼" hardboard. Then you can drill a hole for the guard. An old plastic pill bottle works great here, so just drill the hole to fit the bottle you choose. A couple drops of cyanoacrylate glue hold it in place.

USING THE SAW TABLE. You'll find it works best to use a fine-tooth blade to keep the workpiece from jumping around. You may want to tape very small pieces to a carrier board for easier control. And cut with the workpiece face up to minimize chipout on the finished side.

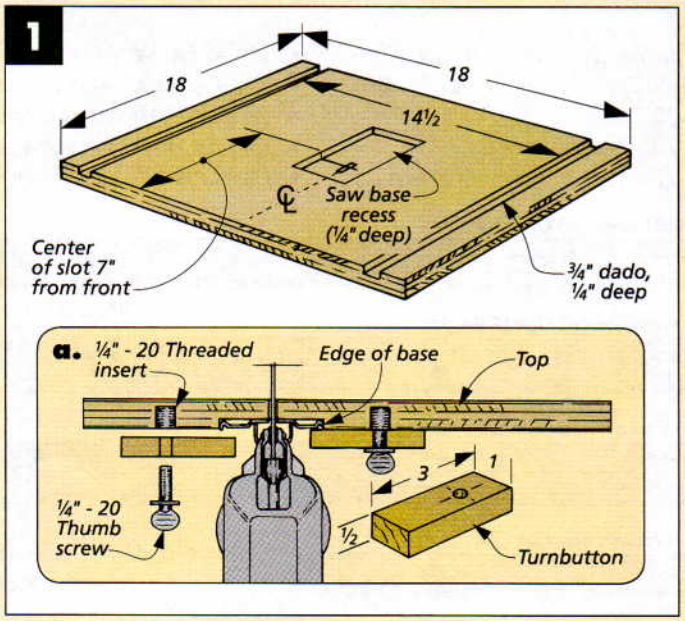

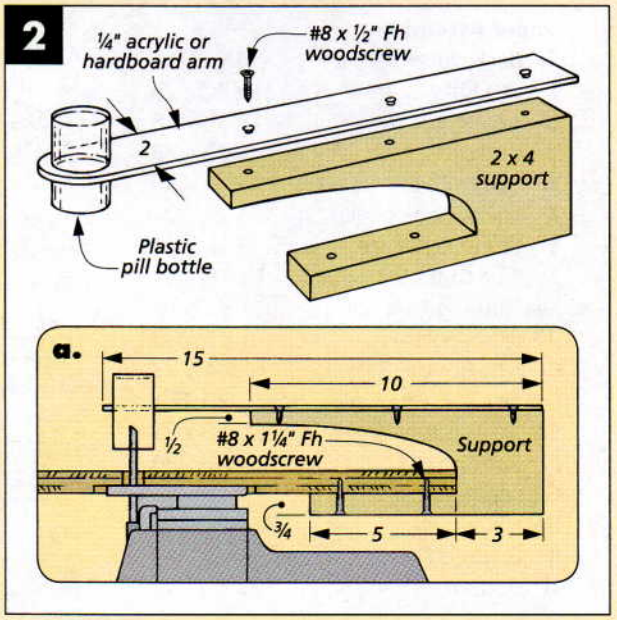

Glass Stops

One way to install a mirror or glass panel in a wood frame is to secure it with quarter-round glass stop. Here's an easy way to make glass stops.

For the stops on the hall bench (page 22), I started with wide (1¼") stock. Then I rounded over all four edges at the router table (Figure 1).

The next step is to move to the table saw and cut a groove on each edge (Figure 2). To do this, first set the rip fence ¼" from the blade, flipping the piece to cut a groove in both edges.

Finally, raise the blade and cut off the stops on the "waste" side of the blade (Figure 3). Then move the fence and cut the two strips off the other side.

Before installing the mirrors, miter the strips of quarter-round to length. Then secure the mirror by nailing the stops in place.

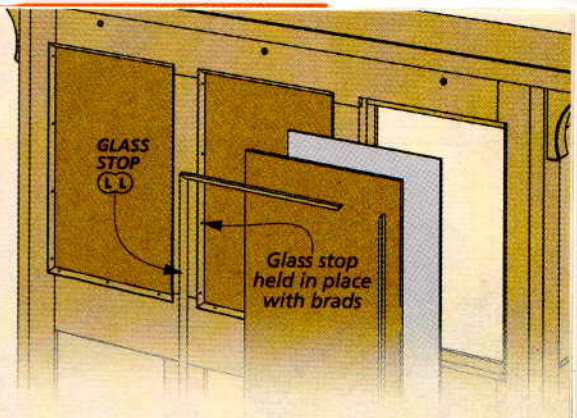

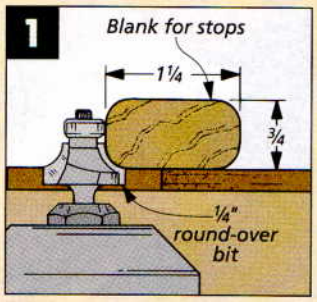

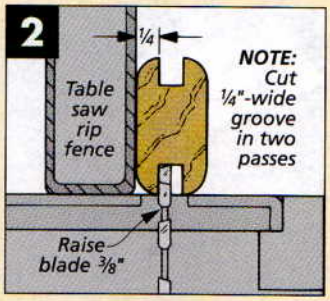

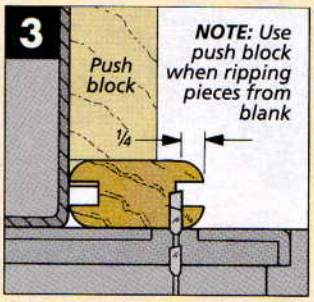

Mitering Small Pieces

When adding narrow molding to the hall bench, you're faced with the task of cutting miters to fit it in place. And pieces this small can be a problem to miter accurately.

An easy solution is to make a miniature miter box like the one shown in the photo below to guide a hand saw. I made the box out of a small piece of 1½"-thick hardwood.

A centered groove on one edge of the box is sized to hold the molding. And a 45° kerf guides the hand saw. Now you have the perfect guide for cutting miters.

You can also use this miter box to trim your miters. Just cut a 45° angle on one end. Then you can extend the workpiece slightly past the end and trim it with a chisel.

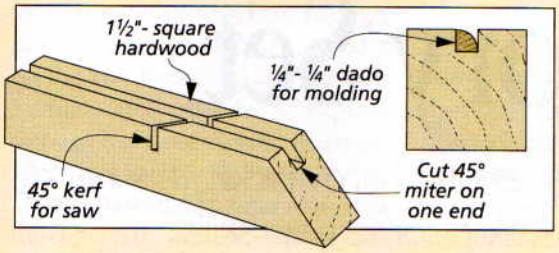

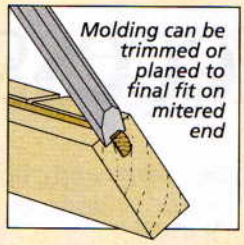

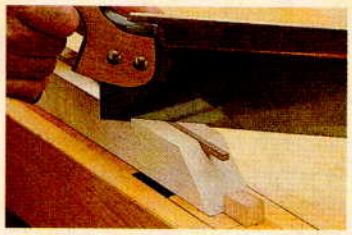

◄ Cutting a perfect miter in a narrow workpiece is a breeze with this simple jig and a hand saw.

Keyhole Hanger

For the letter bin on page 16, I needed a strong, invisible way to hang it on a wall. Keyhole hangers fit the bill.

To install the hangers, I used the procedures shown below and drilled a stepped mortise. The shallow ends of the mortise allow the hanger to sit flush when installed. A deeper recess drilled in the center provides plenty of clearance for the screw in the wall.

To make the mortise, you can start by laying out a centerline and tracing the shape of the hanger. Then, with a bit that matches the width of the hanger, drill a few shallow, overlapping holes the length of the hanger.

For the deeper part of the mortise, drill a series of holes in the center, roughly ⅜" deep.

Now, all you need to do is clean up the sides of the mortise with a chisel and install the hanger with a couple of screws. Then, you're ready to hang the bin. W

▲ Keyhole hangers sit in a shallow mortise cut in the workpiece. A deeper, stepped mortise provides clearance for the head of a screw.

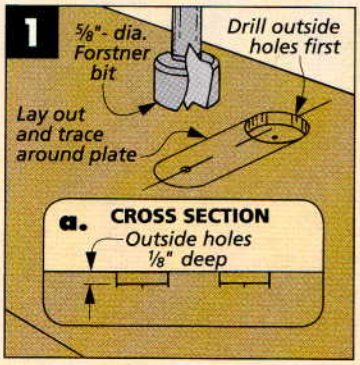

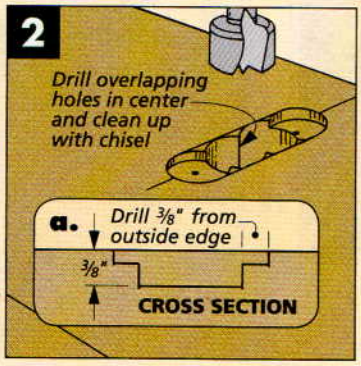

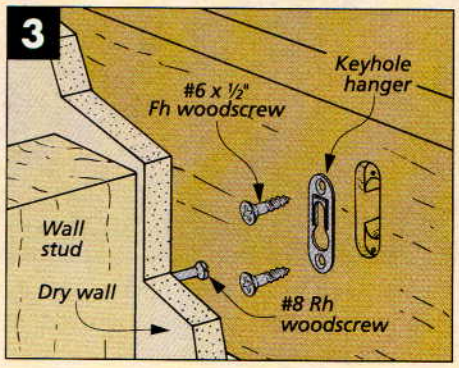

2-in-1 Desk Accessory Set

Combining brass and an eye-catching exotic hardwood, this handy desk set gives you the opportunity to develop some new skills.

This desk set is really two projects in one. At first glance, it looks like a simple stamp dispenser. But when you take a closer look, you'll also find a brass-and-wood letter opener with a replaceable blade.

And, there's plenty to challenge your woodworking and metalworking skills. But don't worry — you'll be using full-size patterns to simplify the complex parts.

And this is also the perfect project for that extra-special piece of wood you've squirreled away. I used *bocote*, which is a tropical hardwood from Central America.

▲ The brass-and-wood letter opener rests in the convenient cradle next to the dispenser that holds a full roll of postage stamps.

Materials and Supplies

A	Stamp Holder (1)	$1\frac{1}{16}$ x $2\frac{3}{16}$ - $3\frac{3}{4}$
B	Side Plate (1)	$\frac{1}{4}$ x $2\frac{3}{16}$ - $3\frac{3}{4}$
C	Blade Cradle (1)	$\frac{3}{4}$ x $\frac{5}{8}$ - $3\frac{3}{4}$
D	Front/Back Trim (2)	$\frac{1}{2}$ x $\frac{1}{2}$ - $3\frac{1}{16}$
E	Side Trim (2)	$\frac{1}{2}$ x $\frac{1}{2}$ - $4\frac{3}{4}$
F	Letter Opener Sides (2)	$\frac{1}{4}$ x $1\frac{9}{16}$ - $3\frac{3}{4}$

- (3) #6 x $\frac{1}{2}$" Fh Brass Woodscrews
- (1) #11 X-Acto Knife Blade
- (1) 0.093" ($\frac{3}{32}$") brass sheet (2" x 12")

Stamp Dispenser

To build the dispenser, you'll cut the workpiece to rough shape, then slice away the side piece, and add some details to both parts before gluing them back together. The box below shows the steps I followed to cut the side plate and holder. But there are a couple of things to keep in mind.

FULL-SIZE PATTERN. First, I used the full-size pattern on the right to shape the dispenser. Spray adhesive will hold the pattern onto the blank while you cut the workpiece.

The next step is to take the blank over to your band saw and cut slightly to the waste side of the pattern's lines. Then, sand the block to the lines to get rid of the marks left by the saw blade.

ADD A CHAMFER. Once you finish sanding, you'll want to rout a chamfer to the side plate. Doing this now gives you plenty of stock to hold onto while you're cutting the chamfer at the router table.

SPLIT THE PARTS. Now, you can cut away the side plate. Because the workpiece is so small, I used a large, notched push block that covered it on top and from behind. That way I could safely run the workpiece through the blade without worrying about kickback or tearout.

STAMP COMPARTMENT. After removing the side plate, you can drill the hole in the holder for the stamps. The pattern shows you where to drill the hole. Then it's back to the band saw to finish up.

TEAROFF SLOT. The pattern also has lines to show you where to cut the slot for the stamps to roll out of the holder. You'll also cut a "lip" on the top edge of the holder to tear off the stamps from the roll.

Finally, you can glue and clamp the side piece back to the holder and set it aside until the glue dries. The next step is to make the cradle for the letter opener and add the base.

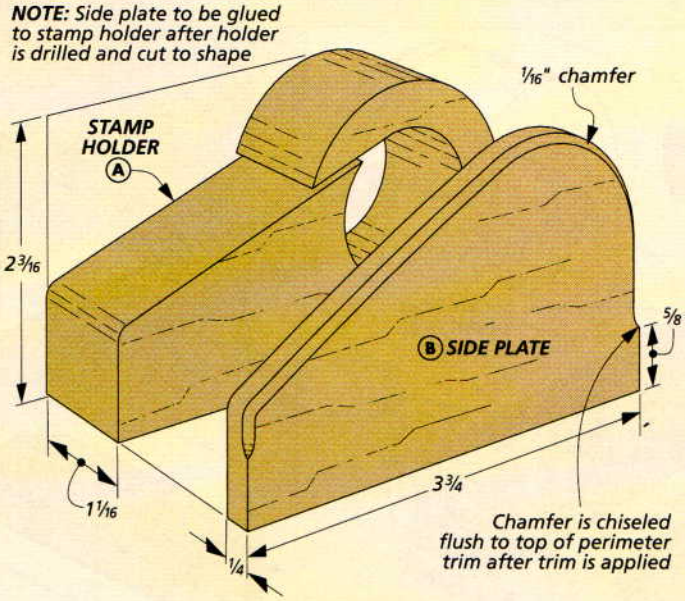

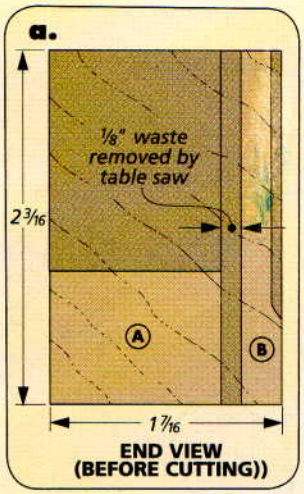

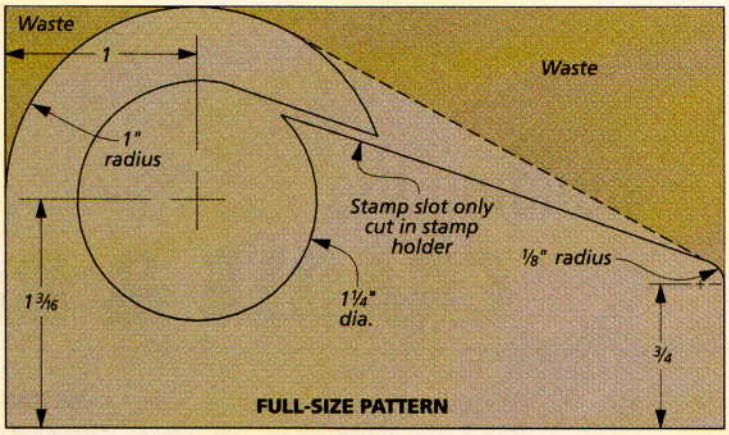

Dispenser Pattern. *Use this full-size pattern to cut out the stamp dispenser. The first cut will follow the outside lines to create the profile. The inside lines will form the slot for the stamps.*

How-To: Shaping the Stamp Dispenser

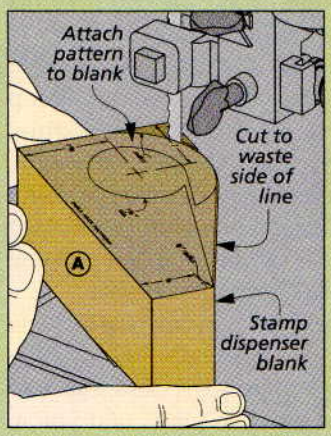

Cutting the Profile. *Using the pattern as a guide, cut the dispenser to rough shape.*

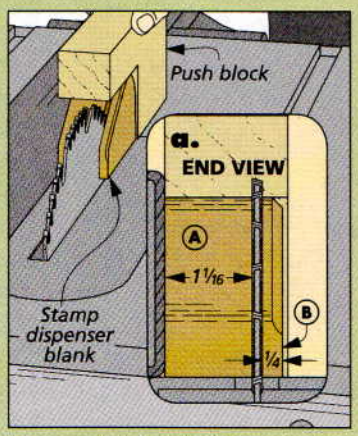

Resaw the Parts. *After sanding the edges of the blank, cut the side plate from the holder.*

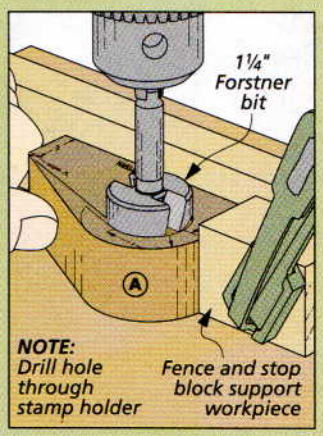

Drill the Stamp Holder. *A Forstner bit makes the hole that holds a roll of stamps.*

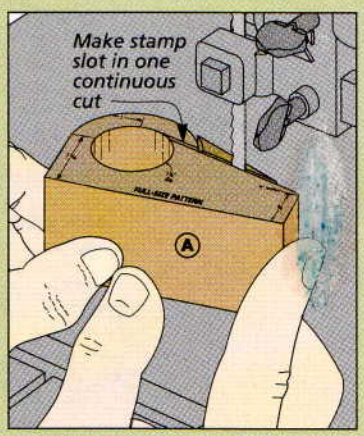

Cut the Stamp Slot. *Follow the pattern again to create the slot for the stamp holder.*

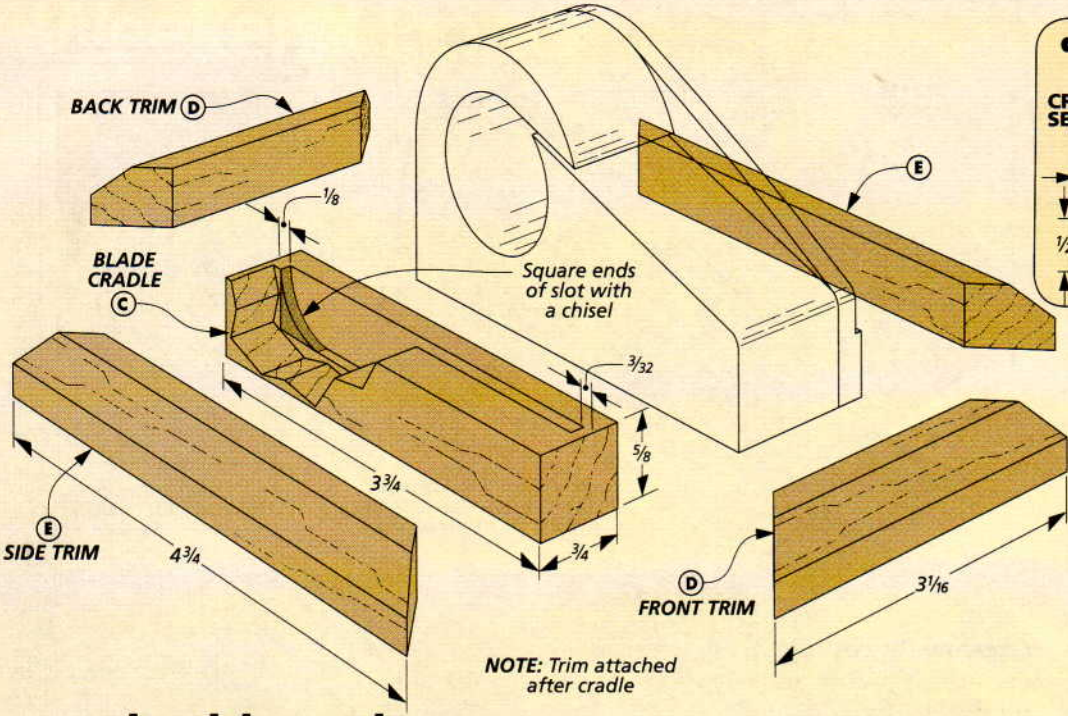

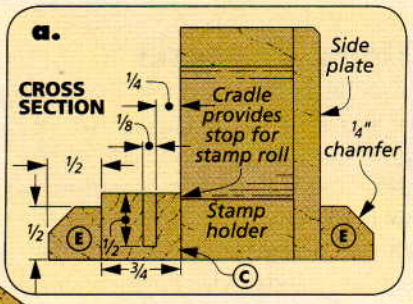

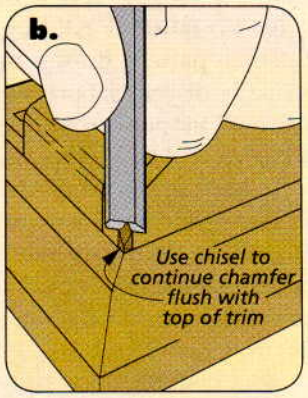

building the CRADLE & BASE

With the dispenser complete, you can begin working on the letter opener cradle and the base. The cradle is a small block with a slot to hold the blade of the letter opener (drawing above). The base is simply molding that wraps around both the cradle and the dispenser.

THE CRADLE. Since the base molding surrounds both parts, you'll need to make the cradle first. After cutting the cradle to size, I cut a 1/8"-wide slot at my router table and a slot-cutting bit. The box below shows how to make the slot, but there are a couple of things to point out.

First, to give me more control while cutting the slot, I carpet-taped the cradle to a larger backer board.

Second, the slot stops short of the ends of the cradle. So, you need to mark the starting and stopping points of the cut on the router fence. To cut the slot, ease the cradle onto the spinning bit with the front edge aligned with the start line. Then, push the workpiece through until the back end reaches the stop line. Finally, pull the workpiece away from the router bit.

To ensure the letter opener blade will fit, you may want to go ahead and enlarge the slot at this time by squaring up the ends. A sharp chisel should do the trick. Next, you can glue and clamp the cradle to the dispenser and start on the base.

THE BASE. The base is made by wrapping the cradle and stamp holder with mitered molding. Before cutting the pieces to length, however, I softened the edge with a routed chamfer. And, just like the cradle, I carpet-taped the molding strip to a larger backer board.

Finally, you can miter the molding pieces to finished length. Add a little glue and some clamps to hold the molding in place, and you're ready to concentrate on making the working part of this project — the brass-and-wood letter opener.

How-To: Routing Base Parts

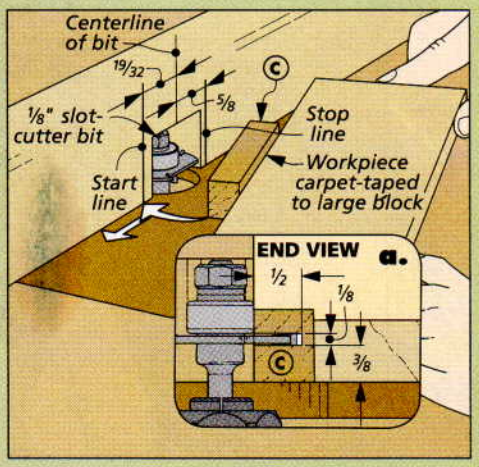

Routing the Cradle Slot. *Mark the start and stop points for the slot on the fence. Use backer board to make cut safely.*

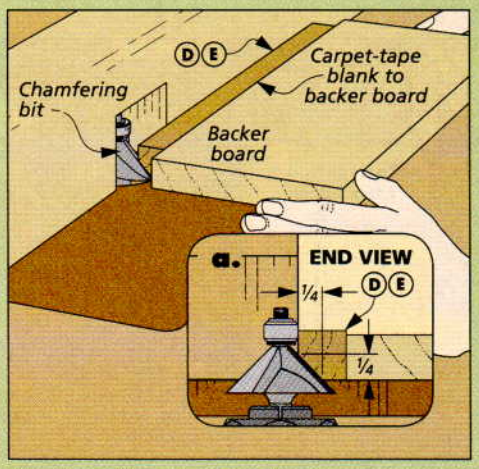

Routing the Chamfer. *Again using a backer board, rout a chamfer on the trim pieces that will make up the base.*

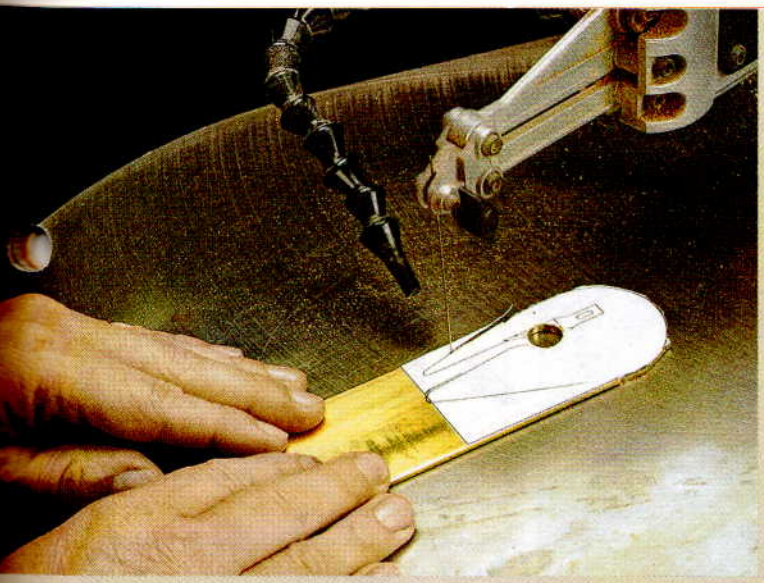

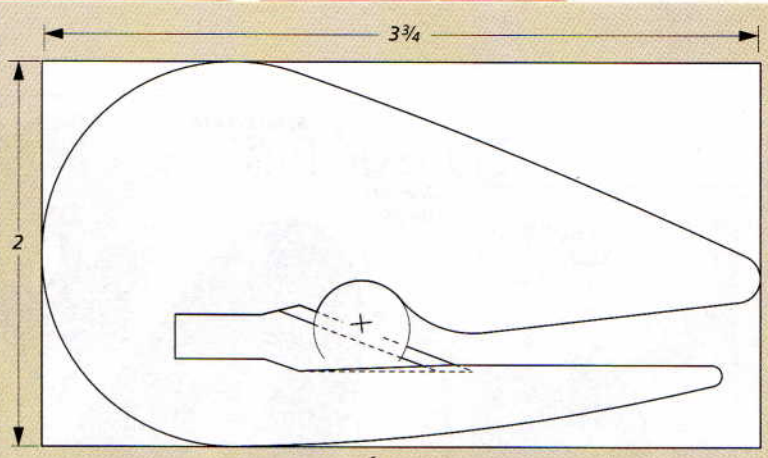

FULL-SIZE PATTERN OF OPENER BLADE

shaping the OPENER BLADE

The letter opener consists of a brass plate sandwiched between two wood sides. The brass really serves two purposes. First, the lower part forms a "mouth" that allows the "lower jaw" to poke its way under the flap of an envelope. Second, the brass holds a #11 *X-Acto* knife blade that slices open the envelope.

Shaping the brass isn't difficult. Like before, what helped me was to make a full-size pattern of the blade's profile (top right corner). Then I attached it to the brass with some spray adhesive.

Next, I drilled the hole in the mouth of the blade (Figure 1). As for cutting the brass plate, use a scroll saw with a metal-cutting blade (see Sources, page 51). This allowed me to follow the profile closely, which reduced filing time later.

The next step is to refine the shape of the brass. I found that thin needle files worked perfectly for this task (Figure 2). I started with a medium-cut file, then moved to a fine-cut file before finishing up with 220-grit sandpaper.

After smoothing the profile, you'll still need to taper the jaw. The best way is to use the needle files again. Then, the top of the lower jaw is beveled at a 45-degree angle on both sides (Figure 2a).

While you're filing the jaw, you should make the notch to hold the tip of the *X-Acto* blade. Test the fit the blade often until it sits snugly in the notch (Figure 3).

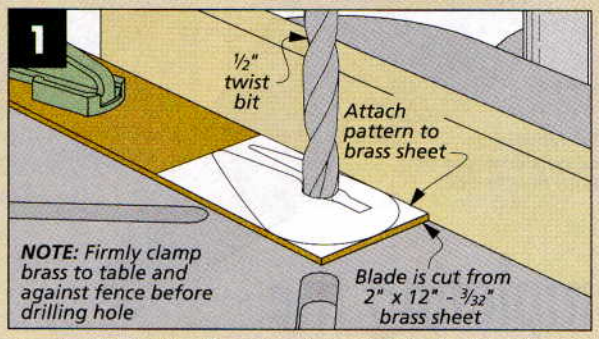

Center Hole. *The first step is to drill the hole in the "mouth" of the brass sheet.*

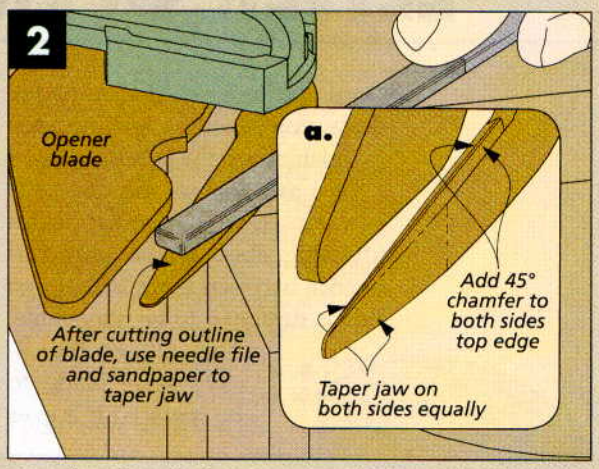

Shaping the Blade. *Using needle files, taper the tip of the jaw on both sides, then file a chamfer on both sides of the jaw's top edge.*

▲ If you don't have a scroll saw, you can use a table-mounted jig saw to cut the brass for the letter opener. See Shop Notebook, page 32.

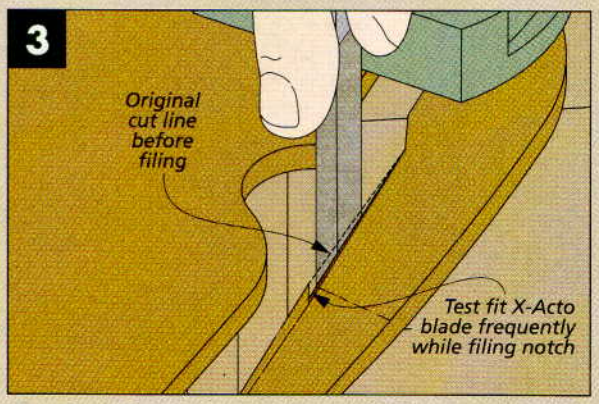

Creating the Blade Notch. *The final step in shaping the jaw is to file a notch that will hold and protect the tip of the X-Acto knife blade.*

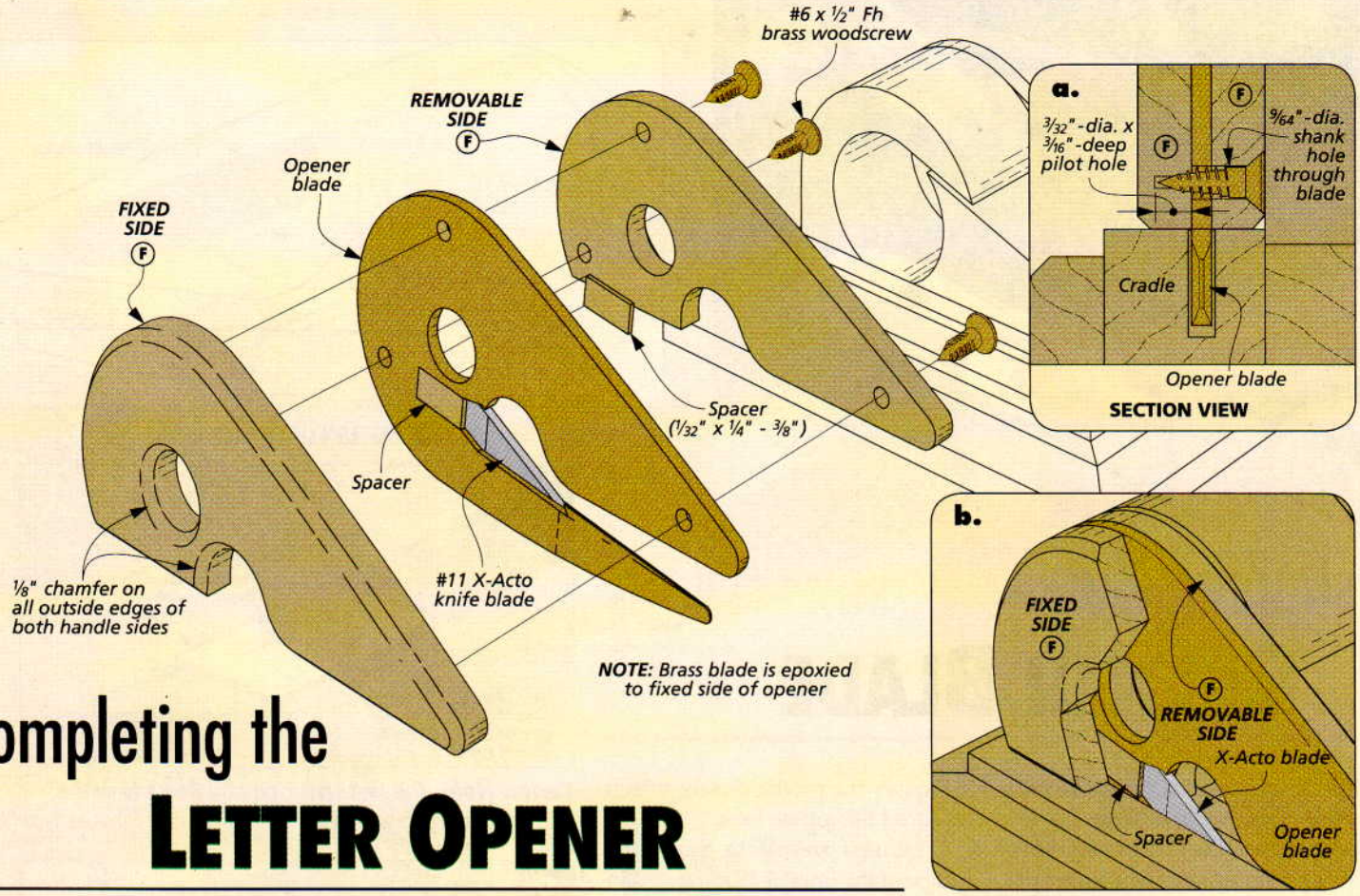

completing the LETTER OPENER

Once you've finished shaping the brass, you're on the home-stretch to finishing up the letter opener.

As I said before, the brass sits between two hardwood sides (drawing above). The only difference between them is that one side is designed to be removable. This allows the *X-Acto* knife blade to be replaced if it ever becomes nicked or dull. The other side is epoxied to the brass.

TWO BLANKS. The first thing I did to make the wood sides was cut two rectangular blanks to size. The drawings below show how I shaped the wood sides.

Before going over to the band saw to cut the profiles, I taped the two blanks together, making sure the bottom edges were aligned. Then, I cut the profiles using the full-size pattern in the left margin. To soften the edges of the sides, I added a chamfer at the router table (right drawing below). Now, you can take the two sides apart and get ready to drill some holes.

CHOOSING SIDES. As I mentioned before, one side of the opener is designed to be removeable. But to make the opener easier to

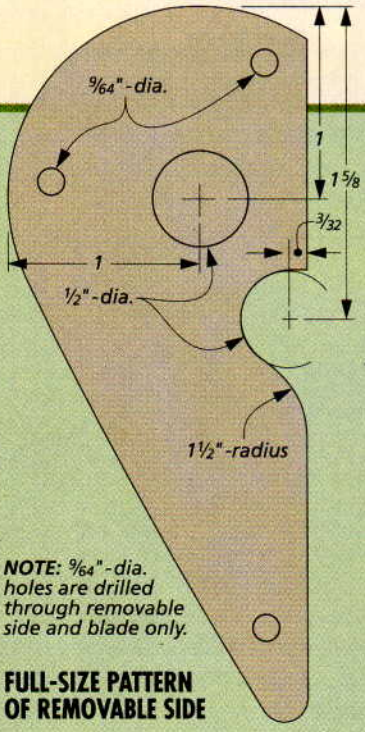

FULL-SIZE PATTERN OF REMOVABLE SIDE

How-To: Duplicating Profiles

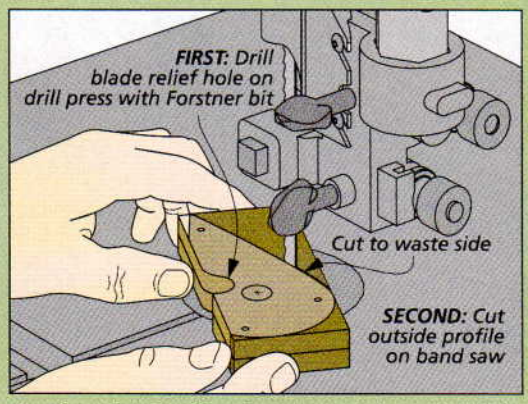

Cutting the Profile. *Carpet-tape the two blanks together, then cut them to shape using the attached pattern as a guide.*

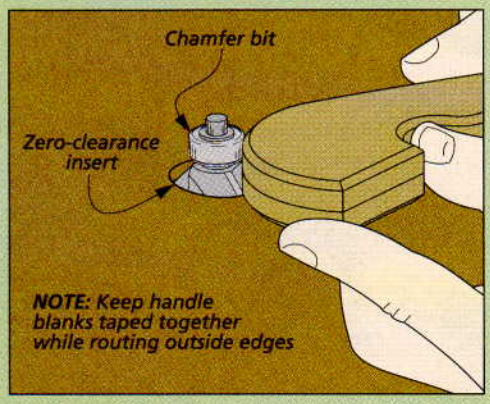

Adding a Chamfer. *After shaping the workpieces, rout a chamfer along the edges of both sides to soften them.*

reassemble, the other side is fixed to the brass. So, let me explain how I put the letter opener together.

First, I epoxied the brass to the outer side of the opener. (I wanted to hide the screws when the letter opener was in the cradle.) This side is the fixed side.

DRY-ASSEMBLE. After the epoxy dries, it would be a good idea to pre-assemble the opener. That way you can ensure the screw holes and the finger hole will line up when you drill them. I carpet-taped the removeable side to the brass and made sure the pattern was in the right place.

Next, you can drill the holes. The box below shows how I did this. But there are a couple of things to keep in mind.

Shop Tip: Cutting Thin Spacers

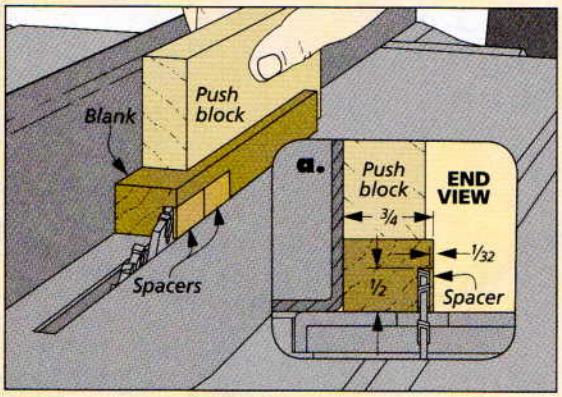

Cutting the Spacers. *Set up your table saw to cut thin spacers from a scrap blank. Raise the blade just enough so the strips will remain attached.*

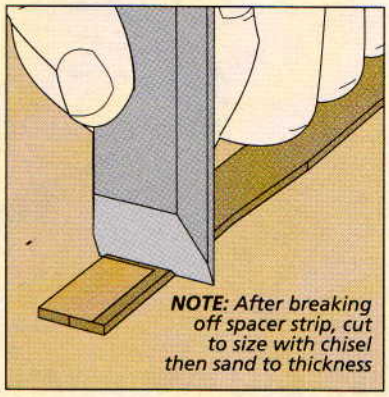

Trim to Size. *Snap off the strip from the blank and trim the spacers to final size with a sharp chisel.*

HELPFUL HINTS

If you take a close look at detail 'a' below, you'll notice that the shank holes are drilled only through the removable side and the brass, but not through the fixed side. This allows the screw threads to bite into the removable side and hold everything together.

FINGER HOLE. The finger hole, however, is drilled all the way through the opener. When drilling a large hole in a small blank, the bit can grab and twist the workpiece. So I used a fence and hold-downs to secure the assembly (second drawing below). After drilling the finger hole, you can add a chamfer to soften its edges and then remove the carpet tape.

SPACERS. Your letter opener is almost finished. But you still need to secure the *X-Acto* knife blade in the opener. To do this, I added some spacers made from pieces of the wood I used for the project (main drawing on opposite page). To keep the knife centered in the brass jaw, you'll add two spacers — one for each side — that are the identical thickness.

To make the spacers safely on the table saw, I set the blade to cut only ½" into the ¾"-thick blank (see drawings above). This will keep the spacers attached to the strip and reduce the chances of splitting or breaking off.

I set the fence of my table saw to rip a strong 1/32"-thick strip on the outside to the saw blade (detail 'a' above), then I cut the workpiece.

The final step is to break the strips off and trim the spacers to finished size with a chisel (far right drawing above). Then, slip the blade and spacers into the opener. The spacers will stay in place once the opener is assembled.

ASSEMBLY. With the knife blade secure, you can assemble the letter opener. Screw the second side to the opener, and find a prominent place on your desk to display your new desk set. W

Drilling the Holes

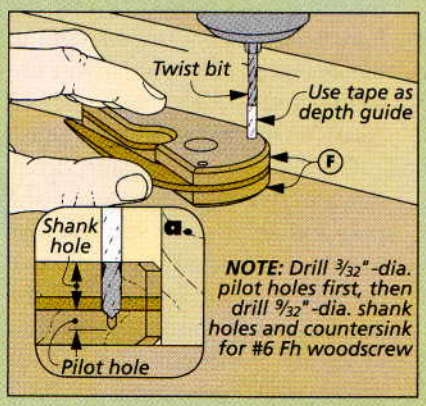

Screw Holes. *Carpet-tape the sides of the letter opener together before drilling the holes for the screws.*

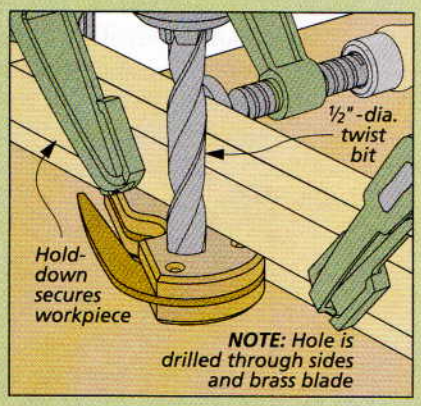

Finger Hole. *Clamp the opener firmly while drilling the finger hole all the way through the workpiece.*

▲ The brass jaw and the *X-Acto* knife blade work together to slice open an envelope smoothly and cleanly.

table saw joinery

Stub Tenon & Groove

For frame and panel construction, stub tenon and groove joinery is hard to top. It's quick, strong, and very "table saw friendly."

One of the keys to building a longlasting project is choosing the best joinery at each stage. My goal here is strong, snug-fitting joints with the least amount of time and effort. This is why time and again I call on stub tenon and groove joinery for frame and panel assemblies. The entire job can take place right at the table saw, the setups are simple, and the results are top-notch.

THE ADVANTAGES. A stub tenon and groove is similar to a mortise and tenon, but there are a couple of things that set it apart. The main difference is that a shallow, continuous groove is substituted for a deep mortise. Cutting a centered groove at the table saw is easier and faster than drilling out and cleaning up a mortise. And since the groove is continuous along the workpiece, it can hold a tenon at each end, as well as the panel (drawing below).

The smooth, consistent groove then makes cutting and fitting the short, mating stub tenon an easier task. Finally, at the end of the job, the assembly of a stub tenon and groove joint is very forgiving. The tenons can be easily aligned in the groove for a tight, square assembly.

CONSIDERATIONS. Before going to the following page to learn the technique, let me mention a couple of points. First, I often use plywood for the panel and glue it into the frame. This adds extra strength to the assembly. However, if you use solid-wood panels, they should "float" in the frame, without glue.

The thickness of the panel determines the width of the groove in the rails and stiles. So if you use plywood for the panel, be sure to size the groove to fit. The depth of the grooves can vary from a minimum of ¼" to a maximum of ⅝". If the groove is shallower, the joint won't have enough "bite." If it's deeper, you'll start to weaken the wood

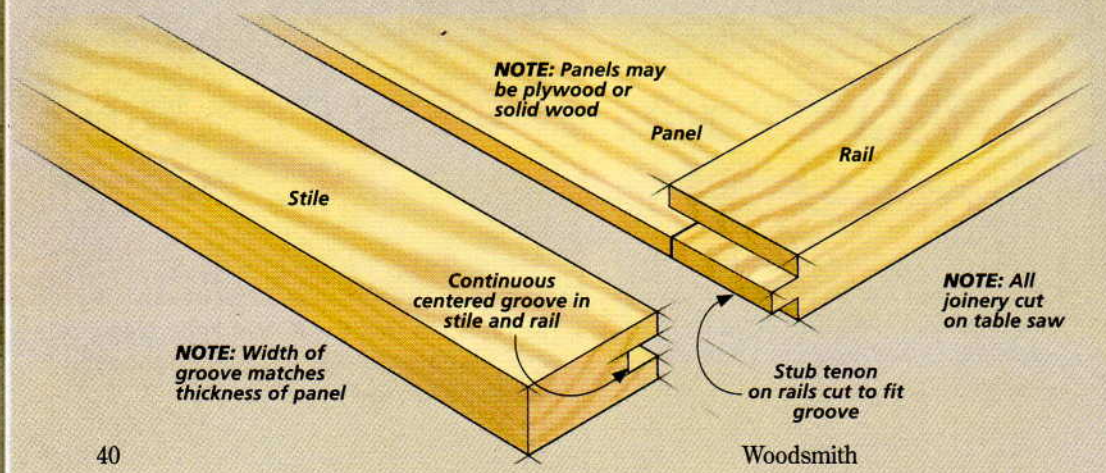

THE GROOVE

The first step is to cut the grooves in all four of the frame pieces (stiles and rails). The grooves need to be centered in the pieces, cut to the right width (to match the panel thickness), and the right depth. You can accomplish all this with a simple table saw setup.

You'll see the basics in Figure 1. The setup consists of the rip fence, a featherboard, and either a standard blade or a dado blade. This choice is governed by the width of the groove. If the groove is ¼" or less, I use a standard blade. For anything over ¼", I'll put on a dado blade slightly narrower than the groove.

THE TECHNIQUE. The key to centering the groove is to cut it with two passes, using the rip fence as a guide. You cut one side of the groove in the first pass, then rotate the piece end-for-end to cut the opposite side. Since both cuts are registered from the fence, the groove is always centered (Figure 1a). The featherboard ensures the workpiece is held snug to the fence and the cuts are accurate.

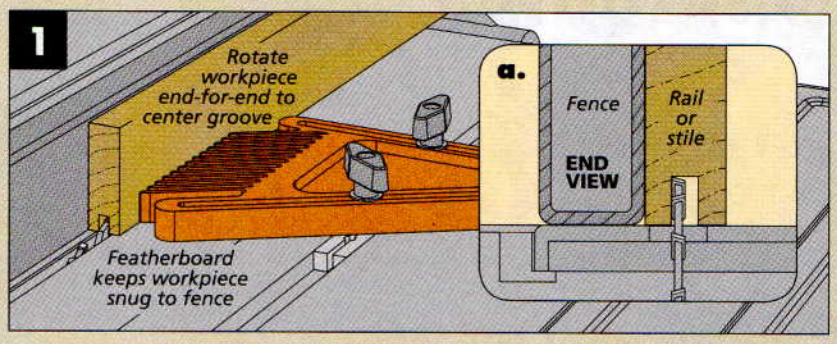

SET UP. A test piece or a workpiece can be used to set the blade height and the fence position. This is a cut and test process. Start by setting the blade a bit low and adjust the fence so that the first cut will fall near the middle of the workpiece. Make a set of passes, then check the depth of the groove. Adjust the blade height, make a second pair of passes, and so on, until the depth of the groove is dead-on.

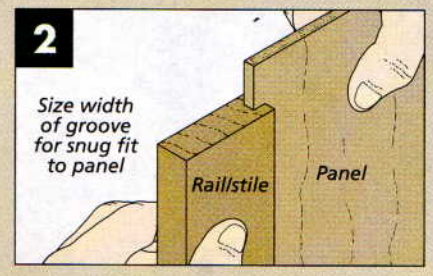

At this point, the width of the groove will be undersize. So adjust the fence setting and repeat the set of cuts until the panel is a snug, but easy, fit in the groove (Figure 2). Now, you can cut identical grooves in the rest of the pieces.

THE STUB TENON

With the grooves completed, you can use them as a gauge for the stub tenons you'll cut on the ends of the rails. The table saw setup used to cut the tenons is shown in Figure 3.

A dado blade, wider than the length of the tenon, is buried in an auxiliary rip fence. This way, the fence can act as an end stop to gauge the length of the tenon while the dado blade cuts one cheek in a single pass. An auxiliary fence is attached to the miter gauge to back up the cut and prevent chipout.

FIRST, ADJUST. Once the saw is ready to go, you'll start by adjusting the blade height, then the rip fence.

The height of the blade determines the thickness of the tenon and its fit in the groove. So I always make certain to get this right. Start by setting the fence "close" with the blade a little bit low. Make a cut across the tip of one rail, flip it over and make a matching cut across the opposite face. Be sure you press down firmly on the workpiece so you get a full-depth cut.

Compare the tenon to the groove to judge how much to raise the blade for the next trial. Then simply sneak up on the fit until the tenon slides snugly into the groove.

Now use the same method to adjust the fence and establish the length of the tenon (Figure 3a). Here, you can test the fit directly to the groove (Figure 4). To ensure a tight assembly, the tenon should be a hair short of bottoming out.

When the fence is positioned, you can cut the tenons on all the rails. Concentrate on keeping the end of the workpiece snug against the rip fence and flat against the table.

ASSEMBLY. Once the tenons are cut and the panels sized, the assembly goes quickly. I position the panel in one stile, add a rail at each end, and finally the remaining stile. After checking the alignment of the parts, a pair of clamps completes the job (main photo). And you'll find that for the small investment of time, the return is pretty impressive. W

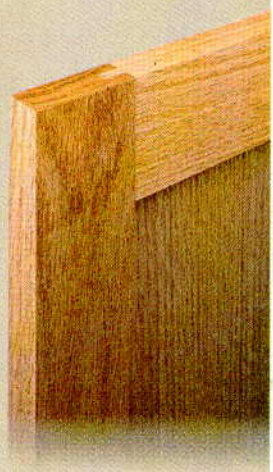

▲ Your efforts will be rewarded with a flush, tight-fitting assembly.

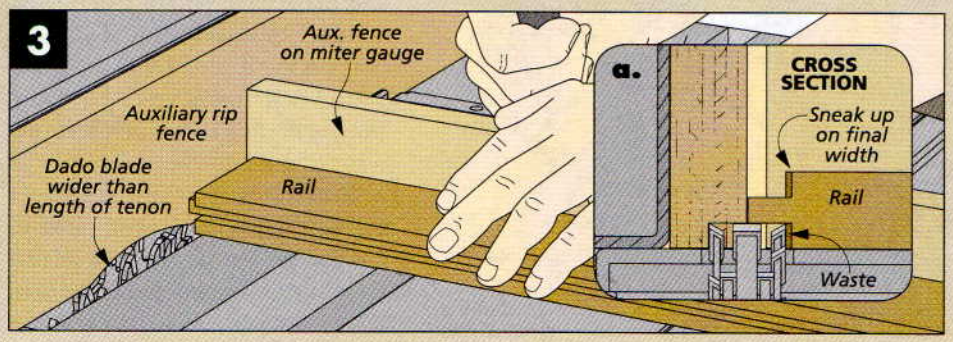

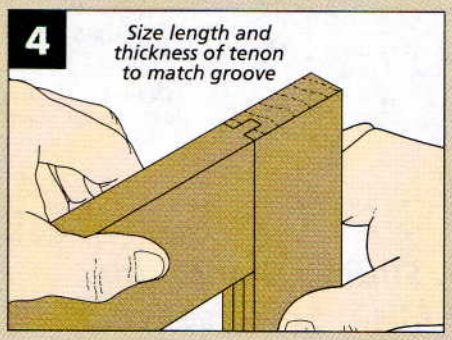

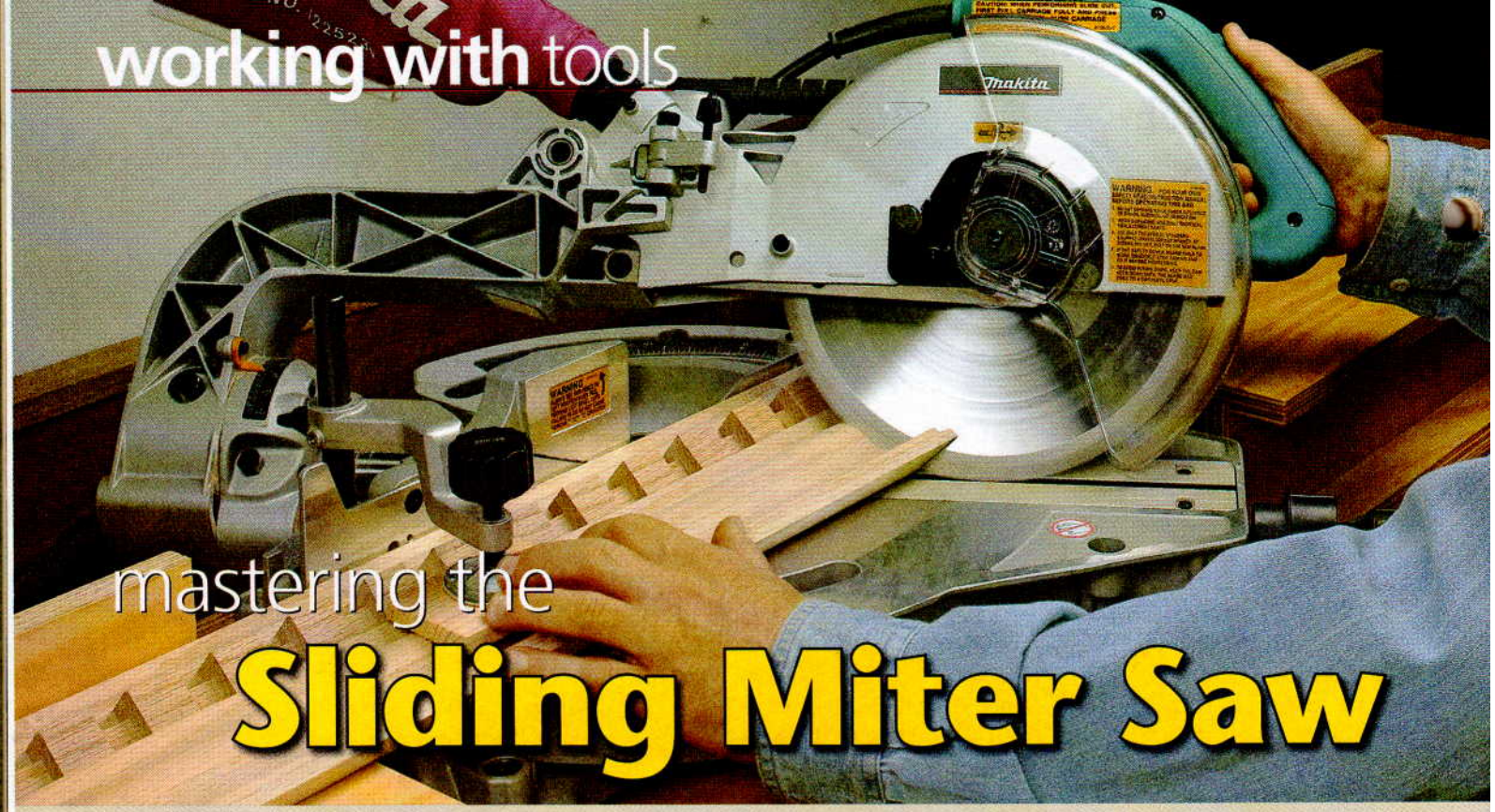

mastering the Sliding Miter Saw

Quick, accurate crosscuts, miters, bevel cuts and more — you'll find the the "slider" to be an extremely versatile tool in a compact package.

The early miter saws (called "chop" saws) were a very handy addition to the "tool box" of contractors and carpenters. But they never really found a valuable niche in most woodworking shops. Well, I've found that the versatility of the *sliding* compound miter saw is a good reason to change that notion. With a "slider," you can have a compact, portable tool that combines many of the functions of both a radial arm saw *and* a table saw.

BIG STEP. The current evolutionary step for the miter saw is a big one. Just like the compound miter saw that preceded it, the blade can be angled in either direction, as well as tilted to make bevel cuts. But the slider borrows a trick from the radial arm saw. The motor and blade slide on a track. So you're no longer limited to a simple up and down chop cut. The blade can be lowered and drawn across the workpiece to make crosscuts, miters, and bevel cuts.

The biggest advantage to this improvement is increased capacity of cut. A 10" compound miter saw will crosscut a 2x6 or miter a 2x4 at 45°. Compare this to a 10" slider that can crosscut a 2x12 or miter a 2x8. This is double the capacity, and more than enough to handle many of the routine cuts you'll make when building a project.

However, the main selling point to me is the convenience and ease of use. Unlike using a table saw, the workpiece is held stationary against the fence, so control is very easy. You can quickly position a piece and make a cut without sacrificing accuracy or quality. And if you can get past the cost of a slider ($500 to $600) I don't think you'll have any trouble finding a hundred and one ways to put it to use.

THE BASICS. As with any tool, to get the best use from it, you need to familiarize yourself with all its features and the basics of its operation. So the best place to start is to take a

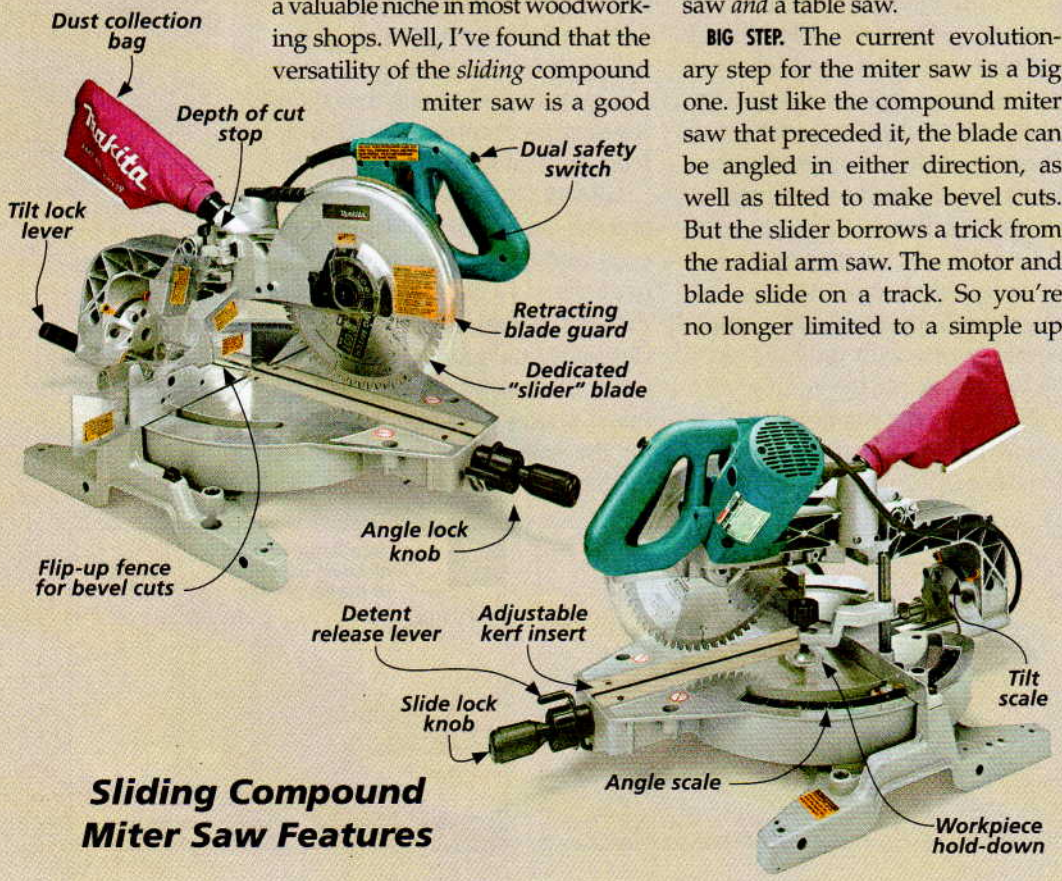

Sliding Compound Miter Saw Features

look at the photos on the opposite page. This will give you a good, general idea of how a slider is set up and some of the most common features you'll find on many saws.

ANGLE AND TILT. Of course, the way a slider works is really the key point here. And this starts with the two-way adjustability of the blade.

On most models, the blade can be angled from 0° to between 45° and 50° to the left or the right, as shown in the upper left drawing. Detents lock the blade at standard angles so crosscuts and standard miter cuts are a simple matter.

The blade can also be tilted to 45° in both directions (upper right drawing). This allows you to make bevel miter cuts on wider workpieces, as well as the compound miter cuts sometimes needed to install crown molding.

SLIDE OR CHOP. A slider also gives you a choice of two cutting actions. When convenient, a slider can be used like a miter saw to make a quick, chopping cut. For smaller workpieces, this is a good option.

But the real advantage lies in being able to cut workpieces with a smooth, sliding cut, as shown in the lower left drawing. This gives you much more capacity and can often lead to a better quality cut.

PULL AND PUSH. The first thing you need to master to get the most from a slider is the technique used for a basic sliding cut. Then the following pages will add a few advanced tips and techniques.

Whether you're making a square, miter, or bevel sliding cut, the technique is the same. This is shown in the lower right drawing. Start by pulling the carriage forward above the workpiece in the raised position. Then turn the saw on, lower the blade, and push it through the cut. When the cut is complete, release the switch and hold the saw in position until the blade stops turning.

Pushing the blade through the workpiece, rather than pulling it, gives you greater control and a cleaner cut. While you're pushing the spinning blade through the cut, its force is pushing the workpiece

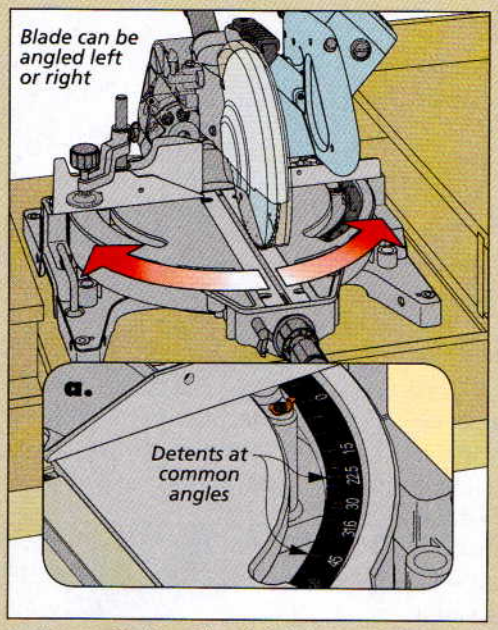

Left or Right. *The blade can be angled slightly past 45° in either direction. Detents at common angles allow quick adjustment.*

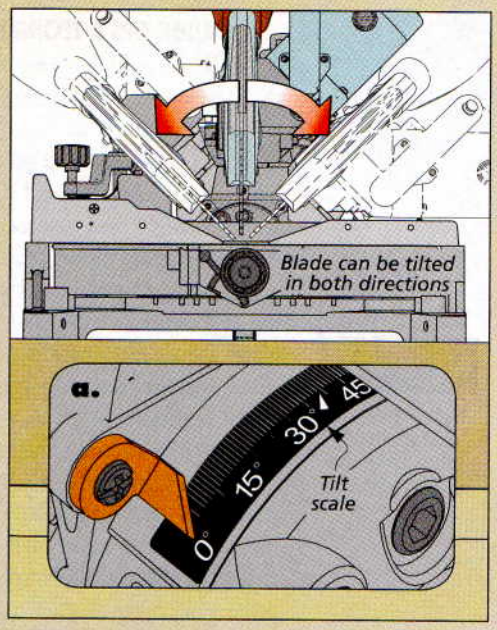

Full Tilt. *You can tilt the blade to 45° in either direction to make bevel miter cuts and as well as compound miter cuts.*

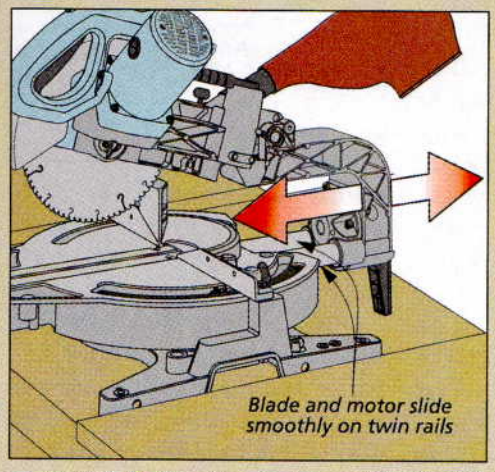

Back and Forth. *The motor and blade slide smoothly on a pair of rigid rails. This gives the saw much greater capacity and versatility.*

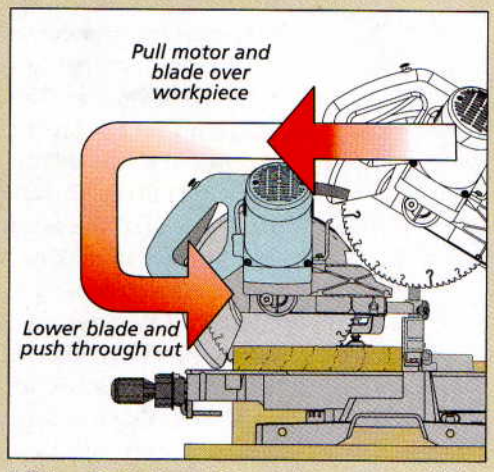

Slider Technique. *To make a cut, pull the motor and blade over the workpiece, lower the blade, and push it back through.*

Shop Tip: Negative Hook Angle

A blade specifically designed for use on a sliding miter saw will give you the best performance. The blade shown at right is a 60-tooth, thin-kerf model. But the most important feature of this blade is the negative 5° hook angle of the alternating top bevel teeth. This makes the blade much less likely to "grab" during a cut and will produce a smoother, chip-free edge.

SLIDER TIPS & TECHNIQUES

Now let's look at a few basic tips and techniques that make the slider such a versatile tool.

FIRST, A SOLID SETUP. I'll start with a simple but very helpful tip. To use a slider safely and get good results, the saw needs to be attached to a solid, stable surface. If you have the space for it, a dedicated station with auxiliary tables and fence is ideal (main photo on page 42). A small station still gives you portability, while making the saw much more convenient to use. You'll find plans for a handy, easy-to-build miter saw station on our website.

Woodsmith GO ON-LINE EXTRAS

To find plans for building a portable miter saw station, visit our website at Woodsmith.com.

CUTTING TO A LINE. Now we can start talking technique. One thing you'll frequently use your slider for is making an accurate cut to a line or layout mark. And there's a trick to this that makes the job quicker, easier, and more accurate.

The top drawings at right illustrate the technique. The idea is to sneak up on the layout line with a series of shallow "nicks" before making a full cut. This allows you to make one accurate cut right on the line in place of making a "rough" cut and then trimming to the line.

A TRIM CUT. When you need to shave a very small amount off the end of a workpiece, the two lower drawings above illustrate a good tip.

With the saw off, lower the blade and butt the workpiece against it using light pressure. Now raise the blade holding the workpiece in place. The slight deflection of the blade caused by pushing the workpiece against it will result in a very light trim by the following cut.

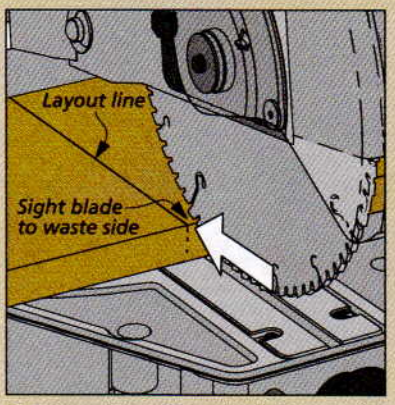

Cut to a Line. *Start by lining up the blade just slightly to the waste side of your layout line.*

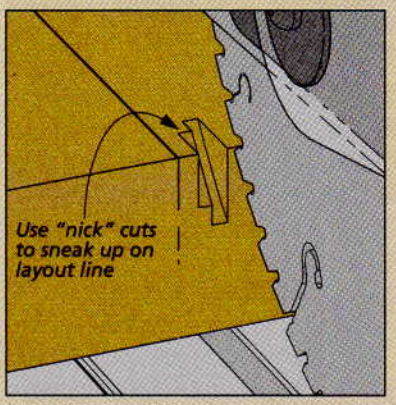

Nick Cuts. *Nick the edge, nudge the workpiece over and repeat, until the cut falls right on the layout line.*

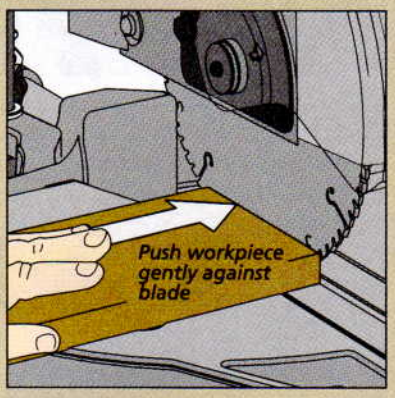

Gentle Push. *To make a very light trim cut, start by gently pushing the workpiece against the saw's blade.*

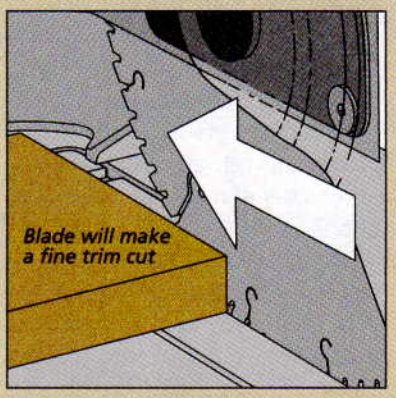

A Fine Cut. *Hold the workpiece in place while you lift the blade. Then proceed with the cut.*

MITERS. Accurate miter cuts are a slider's strong suit. And the best part is there are two ways to get the job done. You can either angle the blade or tilt the blade.

When the width of the piece allows it, the easier method is to angle the blade and stand the piece on edge (left drawing below). You simply have easier control. A bevel miter on a wide piece can be cut with the blade tilted and the workpiece held flat (right drawing below). The shop tip on the opposite page shows how to handle "acute" miter cuts.

HOLD-DOWN. The technique used for miter cuts is identical to that used to make crosscuts. Pull the blade over, lower it, and then push it through. But when making a miter cut, the workpiece can be harder to control. Since the force of the cut is no longer directed straight back at the fence, the likelihood of the piece

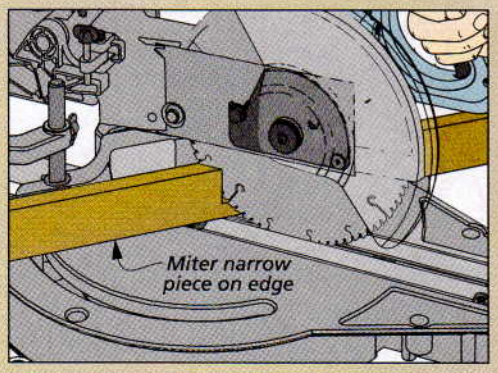

Miter Cut on Edge. *You can miter a workpiece up to 3½" wide by standing it on edge against the fence and angling the blade.*

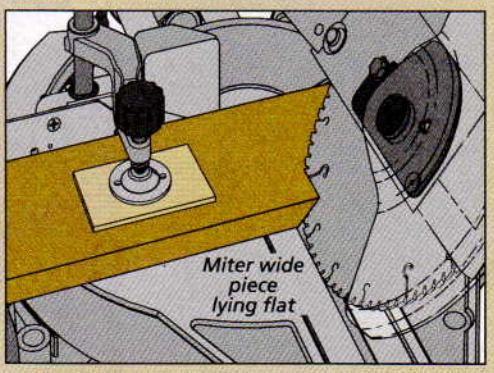

A Bevel Miter. *Mitering a wider workpiece requires a bevel cut. The workpiece is laid flat on the table and the blade is tilted.*

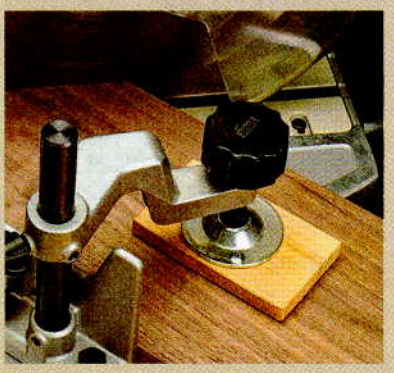

▲ When making a miter or bevel cut, a hold-down will prevent the workpiece from creeping.

"wandering" is greater. You can avoid this by using a hold-down or clamp to keep the workpiece in place, as shown in the photo.

STOPS AND SHORT PIECES. Stops can be very useful for accurately cutting pieces to length. This usually involves clamping a stop to an auxiliary fence attached to the saw. This allows you to cut multiples quickly and accurately.

The two drawings across the top of the page show a stop block setup for safely and quickly cutting multiple short pieces to length. The trick here is to use a stop block along with a spacer. The stop block and spacer are positioned to the "cutoff" side of the blade and used to gauge the length of the cutoff. Before the cut is made, the spacer is removed. This way the cutoff is not trapped between the blade and the stop.

COMPOUND MITERS. Sliders owe their existence to the more complex cuts needed to install crown moldings and other trim. And they can make these cuts much easier to perform.

There are actually two ways to make the miter cuts needed to fit crown molding. The drawings below show the options. The easiest way to get an accurate miter is to cut the molding "in place" (left drawing below). This means the piece is angled between the table and fence in the same way it will be installed. (The molding is actually oriented in the saw upside down.)

Some moldings are too wide to cut this way. So the second option is to lay the molding flat on the table and adjust the saw to make a compound cut (right drawing). This means that the blade is both angled and tilted. The exact angles you use depend upon the type of crown molding you're working with.

A slider is a handy addition to any shop. And once you own one of these versatile saws, I'll guarantee you won't want to give it up.

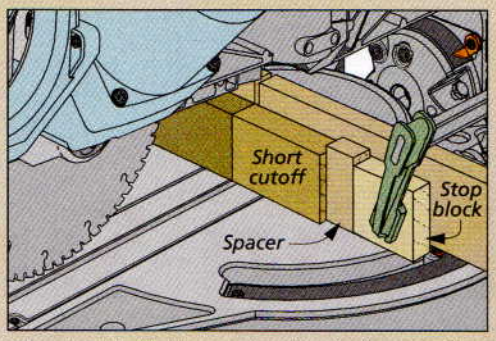

Short Cutoff. *Use a stop block along with a spacer to gauge the length of the cutoff.*

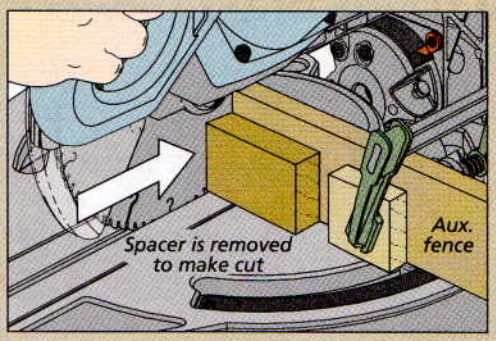

Remove Spacer. *Before the cut, remove the spacer to avoid trapping the workpiece.*

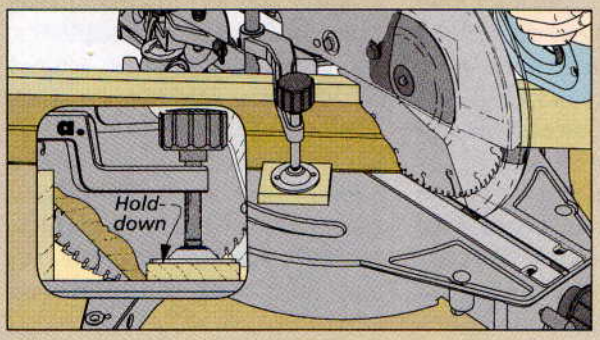

In Place. *The easiest way to accurately miter crown molding is to angle it between the fence and table.*

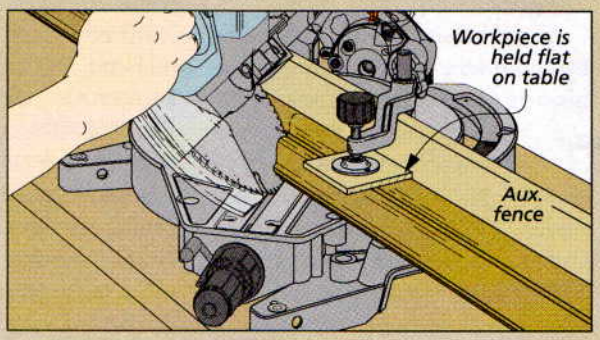

Compound Miter. *Crown molding can also be mitered by both angling and tilting the blade of the saw.*

Shop Tip: Acute Angle Jig

If you need to make an acute miter cut (greater than the 45° capacity of the saw), you'll want to use a jig like the one shown in the photo at right. Never try to make a cut like this "freehand."

The jig is made with the two faces meeting at a 30° angle. This extra 30° allows you make miter cuts of up to 75°.

When using the jig, you should always clamp it securely to the saw fence (or auxiliary fence) and also use a clamp to hold the workpiece in place.

MITER SAW SAFETY

1. Always wear safety glasses and hearing protection.
2. Keep the blade guard in place and operating properly.
3. Your hands should never be near the spinning blade. When necessary, use a hold-down or clamp to avoid this.
4. Make certain the angle lock, tilt lock, or any other adjustable part is tightened down securely before making a cut.
5. The workpiece should always be well supported and held firmly against the fence and table.

12 must-have Finishing Supplies

Keeping your finishing cabinet well stocked is a great start to a top-notch finish for your project.

Although every finishing job is a little bit different, there are always a few items that you'll find yourself reaching for regularly. These are the simple finishing "staples" that you don't want to have to stop and search for, or make a special trip to buy. So I've learned that a good way to make the challenge of applying a quality finish go a lot smoother and turn out better is to always keep these basic supplies "in stock."

All of these items are easy to come by and pretty inexpensive. And the big benefit is that when you start the job, you'll have everything you need and you can focus entirely on applying a quality finish.

1 GLOVES, GLASSES, & RESPIRATOR. The first item (actually three) is a safety kit. It starts with solvent-resistent gloves to protect your hands. (I like blue nitrile gloves.) These allow you to focus on *applying* the finish, instead of worrying about getting it on your hands.

And when a more volatile finish, such as shellac or lacquer, comes out of the cabinet, you'll want to add a respirator and safety glasses to your wardrobe. Keep these safety items on hand, and using them will soon become second nature.

2 CONTAINERS. I don't think you can ever have too many glass jars, empty coffee cans, or similar containers in the cupboard. So I hoard them like a miser. Glass jars make perfect, non-reactive finish or stain containers. A coffee can offers a larger capacity and is often my choice for cleaning a brush.

3 STRAINERS. Keeping your cans of finish from becoming contaminated with "foreign matter" can be a losing battle. So my approach is to strain the finish whenever there's a doubt. A 25¢ strainer is cheap insurance against a "dirty" finish, so I always keep a few on hand. (In a pinch, you can make a strainer from discarded pantyhose.)

4 OPENER & STIR STICKS. Sometimes, the lack of the simplest thing can cause huge frustration. Like having to search high and low for a proper opener to lift the lid on a can of stain or finish. Or then not having a stick to stir up the can and get it ready for application.

Both of these necessities are usually "give aways" at the paint or hardware store. So all it takes is a polite request and you'll always have them within reach.

5 TACK CLOTHS. A pure finish applied to a dusty surface isn't a good combination. All those unseen specks of dust and dirt pop right out once the finish goes on.

Preventing this problem is a lot easier than trying to fix it afterward. The solution is to always have a tack cloth available to wipe down the surface before the finish goes on. A sticky tack cloth is very thorough and won't leave any lint, dust, dirt, or worry behind.

6 MASKING TAPE. When it comes to finishing, I can't get along without masking tape. Masking tape allows you a little easier and better control of the process. You simply mask off an area and the stain or finish ends up only where you want it. I like to keep a supply of both the blue, "14-day," medium-adhesion type and the standard type in 1" and 1½" widths.

7 FOAM BRUSHES. Stock up with an assortment of foam brushes and you'll be surprised how fast you go through them. A disposable foam brush is a great fill-in for brushing tasks that don't require a fine touch. Brushing on a stain or dye or a quick coat of wiping varnish is easily handled with a foam brush. And time-consuming brush maintenance isn't a concern.

8 RAGS & PAPER TOWELS. Like containers, I never let a useful rag get away. I don't have a lifetime supply, but I'm working on it.

Whether it's staining, applying a finish, or just cleaning up, almost every finishing job requires (or is easier with) a rag. Old T-shirts are my favorite material. If you don't have any around the house, you can buy them by the box for a few dollars. And I like to have a roll of paper towels within reach as well.

9 SOLVENTS. Having the right solvent on hand is essential when applying a finish. If you keep a can of the three common solvents — mineral spirits, lacquer thinner, and denatured alcohol — in the cabinet, you'll be ready for any job. Mineral spirits is used to thin and clean up paint and varnish. Lacquer thinner will do the same for lacquer products and is a good, general-purpose solvent. And denatured alcohol is the solvent I reach for when working with shellac.

10 ABRASIVES. All finishes benefit from a light sanding between coats — for some, it's a necessity. So you need a stock of the right abrasives for this job.

This isn't the same stuff you use to prepare the surface for finishing. This is much finer sandpaper — 220 grit on up. Look for sandpaper that's labeled as finishing paper. It will last longer and won't clog. For simple, between-coat sanding, I use 320 or 400 grit. (Special finishes may require even finer grits.)

And I don't limit myself to sandpaper. Fine abrasive pads work great for "sanding" contoured surfaces. They'll conform to the surface and you'll be less likely to cut through the finish at sharp edges.

11 STEEL WOOL. Many finishes benefit from a final rubbing or buffing. This will even out the sheen, remove any small dust specks and leave you with a beautiful, satiny surface. So a package of #0000 steel wool should always be available to handle this job.

12 PASTE WAX. A can of paste wax can be a very simple way to enhance a finish. I use it to add the final layer of protection to a simple linseed oil finish. And it's also an an easy way to even out and enhance the sheen of a finish. So I always know right where to find it.

I'll bet that stocking up with all these supplies won't set you back more than $100. And when weighed against a hassle-free, top-notch finish, that's a great value. W

built-up Crown Molding

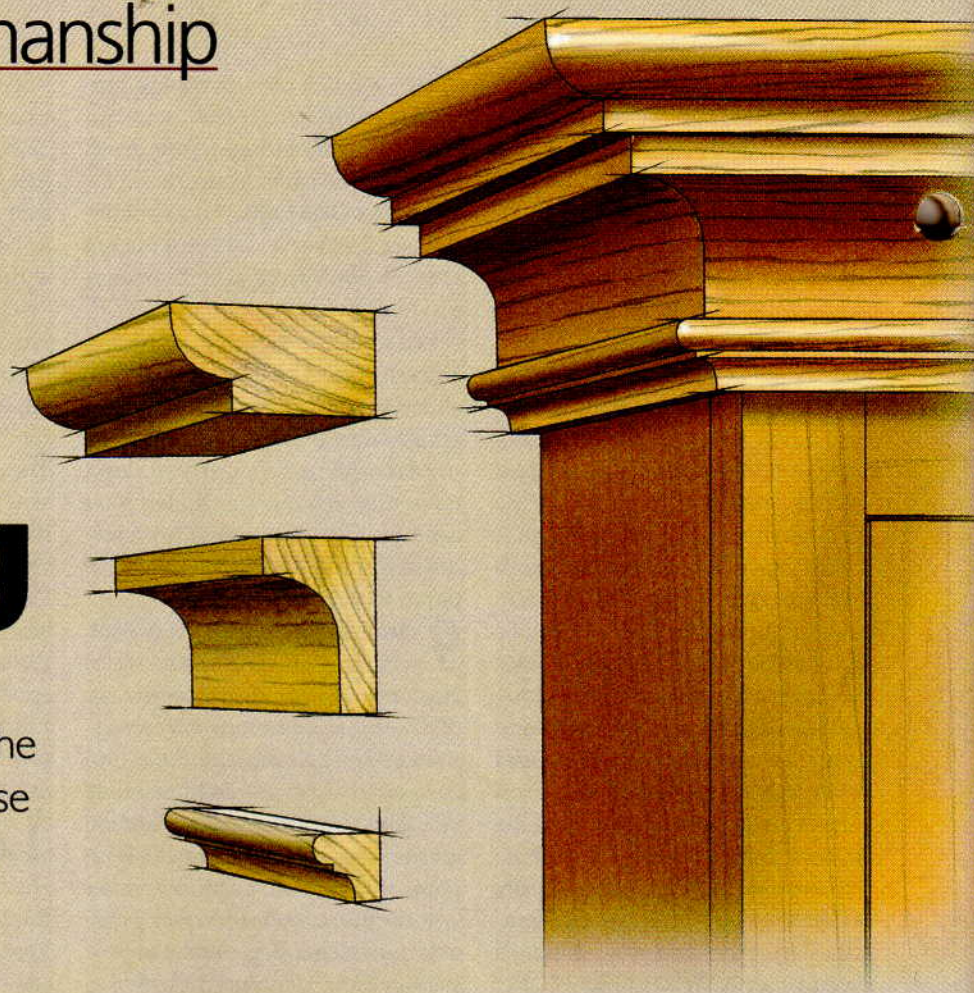

A large crown molding is the perfect way to top off a case project. All it takes is a few common router bits.

A crown or cornice molding serves as the exclamation point at the top of a large case piece. And without it, the case would look unfinished.

The challenge becomes how to make this large molding. Most often, I rely on my router table to provide the moldings for a project. But as you can imagine, I'm limited by the size of the router bits available and the size of the piece I can safely handle. However, this logistical problem doesn't need to stop you from making "fancy" crown moldings.

The solution is to make the elements of the molding separately and then glue them together into a finished, "built-up" crown. This simplifies the process, and the result is virtually indistinguishable from a one-piece molding. (This technique also works well for other types of moldings.)

A WELL-DESIGNED MOLDING. Most moldings use a combination of a few basic profiles. These are the cove, quarter-round, bead, ogee, and flats (fillets) shown in the drawing at right. And all of these profiles are easily made with common router bits. The trick is to put them together in an arrangement that creates a pleasing, well-proportioned molding.

So before making a molding, you need to design it. And here I like to follow a few simple guidelines. First, as a general rule, a large molding looks better when the height is greater than the depth. This draws your eye up and down to add a sense of height and lightness to the case. The molding in the photo at left is a good example.

My second rule is to keep the molding from becoming too busy. I like each profile, large or small, to stand out and at the same time blend together. If the individual profiles are small and closely packed, the molding becomes a "blur." Here's where fillets can help by separating the profiles so they remain distinct.

Finally, I always keep proportion in mind. You want all the elements of the molding to be in scale to one another and the assembled crown molding should be a good fit to the scale of the project.

DESIGN ON PAPER. The first thing to do is design the molding on paper using the router bit profiles as your patterns. Making a full-scale drawing allows you to get the size and

▼ The crown molding below was shaped in three sections, but from the face it looks like a single piece.

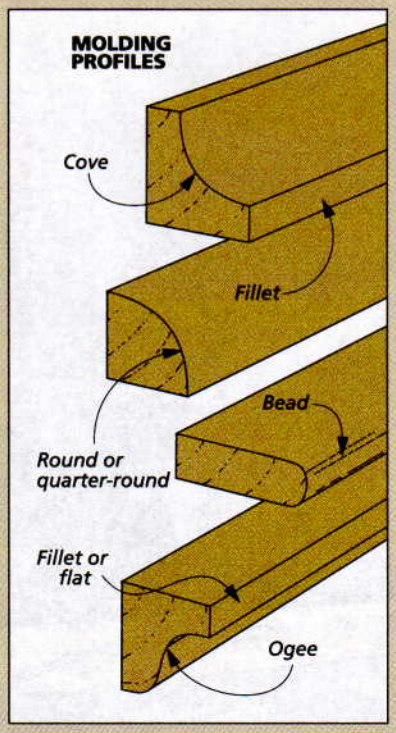

proportions right. And you can see how the individual pieces can be assembled to make the molding.

The molding shown on the opposite page follows all the rules and makes a good example of how to "build" a crown molding. As you can see, it's made in three sections. First comes a small, "bead and cove" profile that ties it to the cabinet and makes a smooth transition. Then, a large, simple cove section is used to add height and depth. The cap, separated from the cove by fillets, is simply a roundover that ends sharply to punctuate the crown.

MATCH YOUR WOOD. Before talking technique, I should mention a word about wood selection. The idea is to make the molding appear as if it were all one piece. So you want to pay attention to the color and grain match of the individual pieces.

Whenever possible, it's a good plan to cut all the sections from one board. If necessary, you can use the pieces in different orientations — edge grain, or face grain. The routed profiles do a good job of hiding any change in grain direction.

MAKING THE CROWN

Once you've designed the molding, the work is pretty routine. To make the crown molding shown, I started with the large cove section.

The top drawing at right shows the process. The profile is cut with a ⅝"-rad. cove bit. Elongating the cut creates the illusion of a larger radius. This is simply a matter of cutting the cove to full width, then raising the bit to extend the cut into the workpiece. The bottom section actually ends up being flat, but the upper rounded section of the cove is what catches your eye.

To do the work safely, I started with a wide piece of 1"-thick stock. This leaves you with plenty of surface riding against the fence as the cove cut is extended. When completed, the cove section is cut to height on the table saw.

A BEAD AND COVE. Next comes the small bead and cove piece that sits below the large cove. The bead stands proud of the bottom edge of the large cove to add depth.

Again, this small molding is made on the edge of an oversized piece of stock. The two middle drawings at right show the two steps involved. First, I cut the bead first with a single pass across a beading bit. (You could also use a ⅛" roundover bit to cut the bead in two halves.) When cutting the bead, you'll also create the short fillet below that separates the bead and cove.

The cove is routed with a ½"-dia. core box bit. Just make sure to leave at least a 1/16" fillet separating the profiles. Then I ripped the molding free, leaving it a little extra-wide to make the final assembly easier.

A SIMPLE ROUNDOVER. The top "cap" is routed on a wide piece with a ½" roundover bit. You want the arc of the roundover to end sharply. This gives you a crisp end point at the top of the molding, as shown in the lower drawing at right. It also leaves a wide fillet along the lower edge of the piece that — when combined with the cove section below — adds a "stairstep" detail.

ASSEMBLY. Once all the pieces are made, the goal of the assembly is two-fold — the molded edges should be aligned properly, and you want the glue joints to be tight. The best way to get this done is to glue up only two pieces at a time.

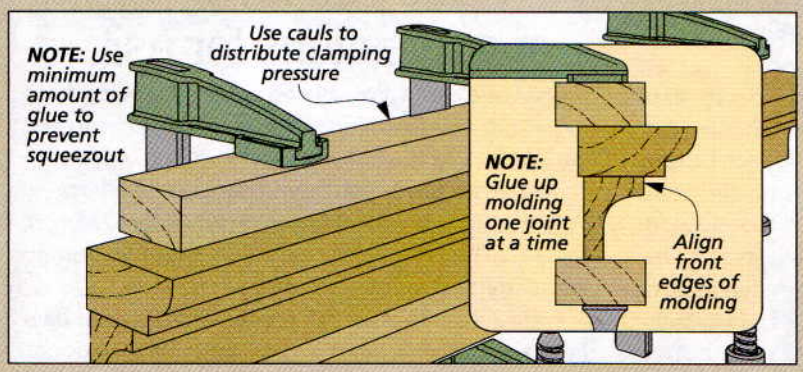

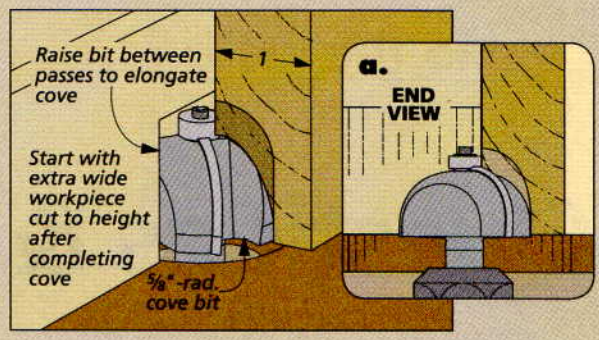

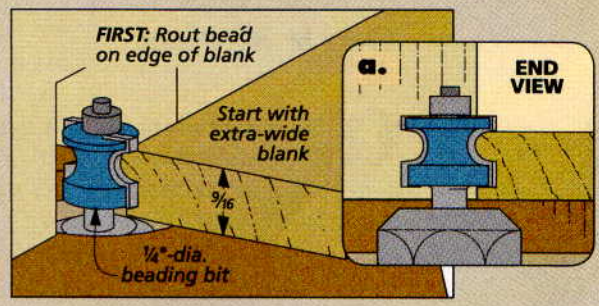

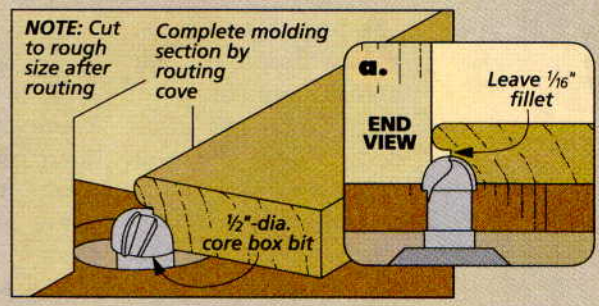

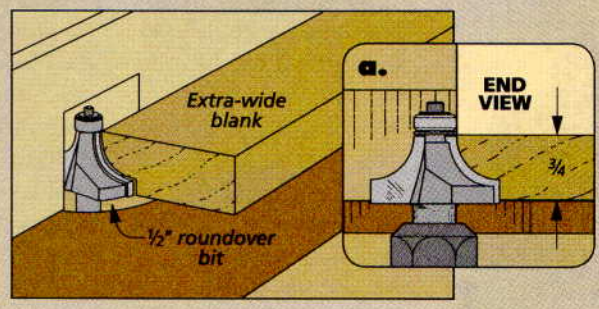

The keys to the glueup are plenty of clamps, cauls to distribute the clamping pressure, and a minimum amount of glue. There will be very little stress on the glue joint, so strength isn't a big concern. I spread the glue sparingly, keeping it to the back edge of the joint and then let it tack up for a minute. Then align the molded edges (don't worry about the back face) and clamp the pieces, making sure they stay in place.

Once the glueup is complete, the back face can be trimmed flush at the table saw or jointer. And once it's installed on your project, only you will know the secret of your "pieced" crown molding. W

Questions & Answers

Dado Blades

Q ***Can you tell me the difference between a stack and a "wobble" dado blade?***

Gabe Alexander
Council Bluffs, Iowa

A Basically there are two types of dado blades: adjustable (or "wobble") and stack dado blades. While both are designed to make a cut that's wider than a standard saw kerf, they do it in different ways.

WOBBLE BLADE. A wobble dado uses a single blade that's tilted on the arbor to cut a dado or groove between 1/4" and 13/16" wide (top photo at left).

To set the width, the blade has a beveled disk attached to each side. Adjusting these disks determines the tilt angle of the blade. The more the blade is tilted, the wider the cut. And because the blade is tilted, it appears to wobble as it rotates.

▲ The wobble blade (top) is easy to use, but the stack blade (lower) produces a better cut.

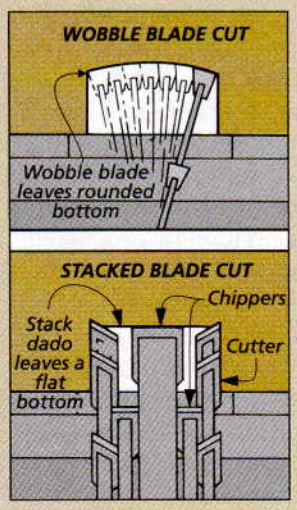

In theory, this sounds pretty easy to do. But when trying to fine-tune the width of the cut, I've found it's easy to lose track of how much I've adjusted the disks.

Another thing you'll notice is wobble blades tend to vibrate. That's because the blade is spinning off-center on the arbor. And that can leave more splintering and tearout — especially when cutting plywood.

And one final thing to consider is that because the blade is tilted, it produces a cut with a rounded bottom (upper drawing at left). This isn't a big problem when making narrow cuts, but the wider the cut, the more exaggerated the curve becomes. If your project calls for exposed joints, a wobble blade will leave a gap that will be easily visible.

STACK DADO. In contrast to a wobble blade, a stack dado uses multiple blades that are stacked on the saw arbor (bottom photo in left margin).

A stack dado consists of two kinds of blades — cutters and chippers. Cutters are the two outside blades that create the sides of the cut. Chippers are the inside blades that remove the waste left between the two cutters.

Most stack sets include four to five chippers and a set of shims that vary in thickness. Arranging them in different combinations will help you fine-tune the width of the cut. If you use all the blades and chippers, you can produce a cut that's about 13/16" wide, just like a wobble blade.

Regardless of the number of chippers and shims or the width of the cut, a stack dado will always produce a smooth, flat-bottomed cut (bottom drawing at left).

Its drawback, however, is the time spent finding the right combination of blades and shims to get a good fitting dado or groove. That's why I built the gauge you see below. It tells me which chippers and shims to use to get a specific width of cut.

So, what's the bottom line? A wobble blade is less expensive and easier to work with than a stack set. And for occasional use, it works fine. But if you're looking for the best quality cut, I'd go with a stack dado blade set.

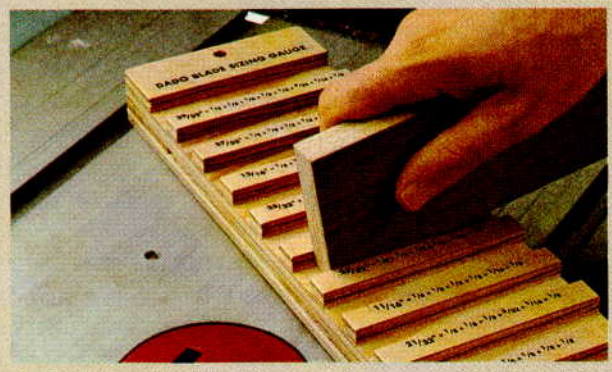

▲ Each cut in this shop-made gauge is labeled to make it easier to find the right combination of chippers and shims for the best fit.

Do you have any questions for us?

If you have a question related to woodworking techniques, tools, finishing, hardware, or accessories, we'd like to hear from you.

Just write down your question and mail it to us: Woodsmith Q&A, 2200 Grand Avenue, Des Moines, Iowa 50312. Or you can email us the question at: woodsmith@woodsmith.com.

Please include your full name, address, and daytime telephone number in case we have questions.

Sources

HIGH-BACK HALL BENCH

The hall bench on page 22 is a great-looking way to welcome visitors into your home and keep clutter under control.

While I could get the screws and washers locally, I ordered most of the other hardware items from *Lee Valley*: the 3" no-mortise hinges (00H51.24), the T-nuts (00N22.16), and the threaded inserts (00M90.01). The coat hooks (02005910) came from *Van Dyke's Restorers*.

2-IN-1 DESK SET

The desk set on page 34 will be the focal point of any desk it sits on. Most of the hardware used in making the project can be purchased at any hardware store.

I ordered the brass sheet (0.09"/ 11 ga. brass 260 H02 Sheet) from *Online Metals*. After clicking on the link for the brass sheet, just fill out the dimensions on the website.

To shape the brass, I used my scroll saw with a metal-cutting blade. I ordered the blade (MAB#3) online from *BG Artforms*, whose contact information is in the right margin. If you decide to use a jig saw and the table on page 32 instead, you can find metal-cutting blades for jig saws at hardware stores and home centers.

The desk set is also the perfect project to build with a specialty or exotic wood. I used bocote, a tropical hardwood from Central America, that I purchased from the *Woodsmith Store*.

Your local lumberyard might carry some interesting wood species, or you could contact some online retailers, such as *Constantines*, *Rockler*, or *Woodcraft* to see what they have in stock.

LETTER BIN

The letter bin shown on page 16 is a great way to keep your mail organized. And building it won't require any unusual hardware.

In fact, other than the screws, the only other hardware you'll need is a pair of keyhole hangers to hang the bin on the wall. The ones I used came from *Rockler* (28837), but you can also get them from the *Woodsmith Store*.

CHOOSING ROUTERS

Choosing the best router for your router table can be a difficult decision. The routers featured in the article on page 10 represent the current crop of mid-sized models from a variety of manufacturers. You can find most of them at your local home center or through the online retailers like *Rockler* or *Amazon.com*.

An auxiliary on/off switch is a great accessory to have for your router table. Not only is it convenient, but it also provides safety by allowing you to turn off the router quickly in an emergency.

The auxiliary switch in the article was purchased from *Rockler* (63026). It's also available from the *Woodsmith Store* and other retailers (see right margin).

TABLE SAW ALIGNMENT JIGS

The secret to a smooth-running table saw that produces great cuts is proper alignment. The article on page 14 highlights three great jigs that will help keep your saw cutting straight and true.

The *A-Line-It* jig is manufactured by *In-Line Industries*, while the *SuperBar* and *MasterPlate* are made by *MasterGage*. These jigs were purchased from *Rockler*, and are also available from the *Woodsmith Store*.

The *TS-Aligner Jr.* is made and sold by the *Edward J. Bennett Co.*, (see right margin).

Online Customer Service

Click on *Manage My Account* at **www.woodsmith.com**

- Access your account status
- Change your mailing or email address
- Pay your bill
- Renew your subscription
- Tell us if you've missed an issue
- Find out if your payment has been received

MAIL ORDER SOURCES

Project supplies may be ordered from the following companies:

Woodsmith Store
800-444-7527
A-Line-It, Auxiliary Router Table Switch, Exotic Wood Blanks, Keyhole Hangers, Routers, SuperBar, MasterPlate

Constantines
800-443-9667
constantines.com
Exotic Wood Blanks

Amazon.com
Auxiliary Router Table Switch, Routers

In-Line Industries
800-533-6709
in-lineindustries.com
A-Line-It

MasterGage
888-893-8300
mastergage.com
MasterPlate, SuperBar

Online Metals
800-704-2157
onlinemetals.com
Brass Sheet

Rockler
800-279-4441
rockler.com
A-Line-It, Auxiliary Router Table Switch, Exotic Wood Blanks, Keyhole Hangers, MasterPlate, Routers, SuperBar

Edward J. Bennett Co.
800-333-4994
ts-aligner.com
TS-Aligner Jr.

Woodcraft
800-225-1153
woodcraft.com
Auxiliary Router Table Switch, Exotic Wood Blanks, Routers

Van Dyke's Restorers
800-558-1234
vandykes.com
Coat Hooks

BG Art Forms
888-717-4202
bgartforms.com
Metal-Cutting Scroll Saw Blades

Woodsmith®

HARDBOUND VOLUMES

This set includes six hardbound volumes of ***Woodsmith*** *(Volumes 22 through 27). Each volume includes a year of issues, plus a table of contents and a handy index.*
Buy them for $29.95 each. Or get the whole six-volume set for $139.50 and ***SAVE $40***
— that's like getting one volume FREE.
(Offer expires 12/31/07)

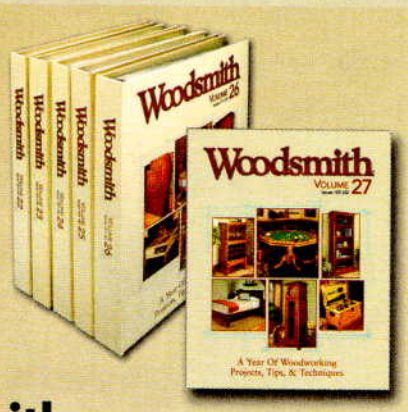

Go to www.Woodsmith.com
or Call 1-800-444-7527 Today to Order Yours!

looking inside
Final Details

▲ *2-in-1 Desk Set.* Take a small piece of wood and a little bit of hardware — add a dose of shop time and you've got a unique project. You'll find the plans on page 34.

▼ *Letter Bin.* Here's a great-looking solution to a pretty ordinary problem. This compact wall unit will keep the mail from piling up and help you get organized. Turn to page 16 and see how to get started.

▲ *Hall Bench.* The photo above tells the story on this project — but on part of it. You can easily appreciate the Craftsman-style design and the useful features on the outside. What you can't see is the handy storage under the hinged seat. On page 22 we'll give you all the details.